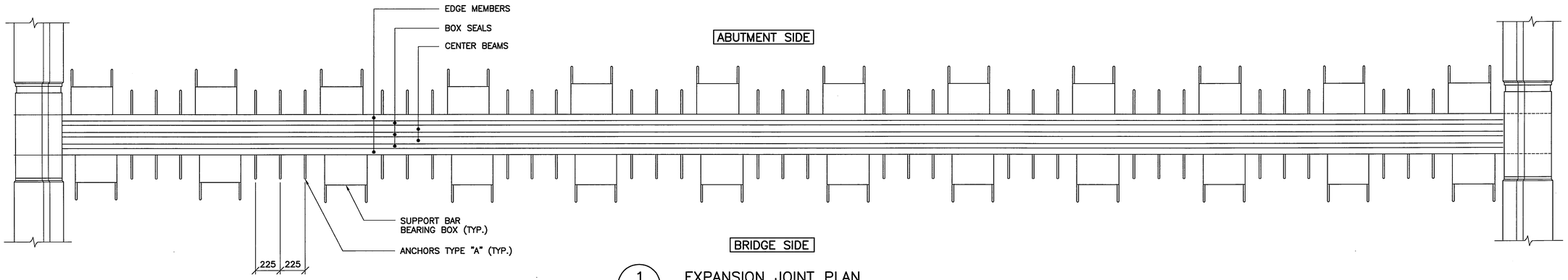

1 — EXPANSION JOINT PLAN
1 : 20

WEST EXPANSION JOINT SHOWN
EAST JOINT SAME EXCEPT BRIDGE
AND ABUTMENT SIDES ARE REVERSED.

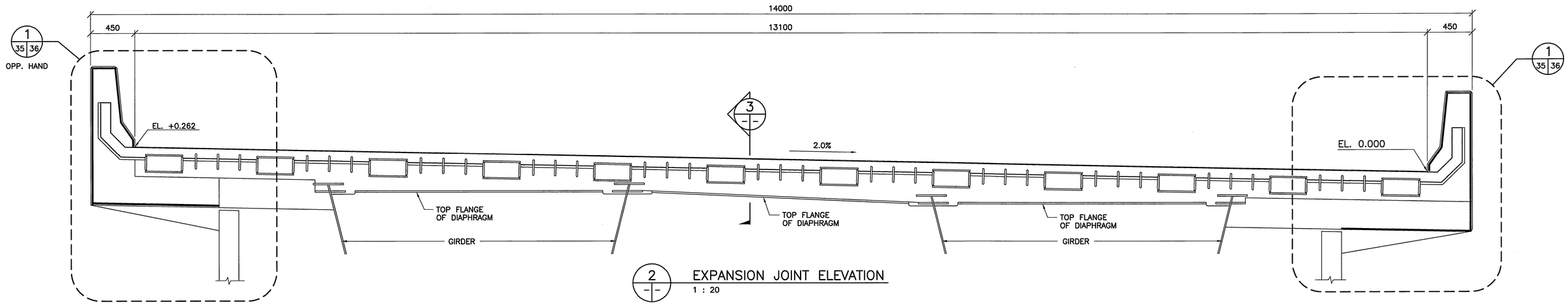

2 — EXPANSION JOINT ELEVATION
1 : 20

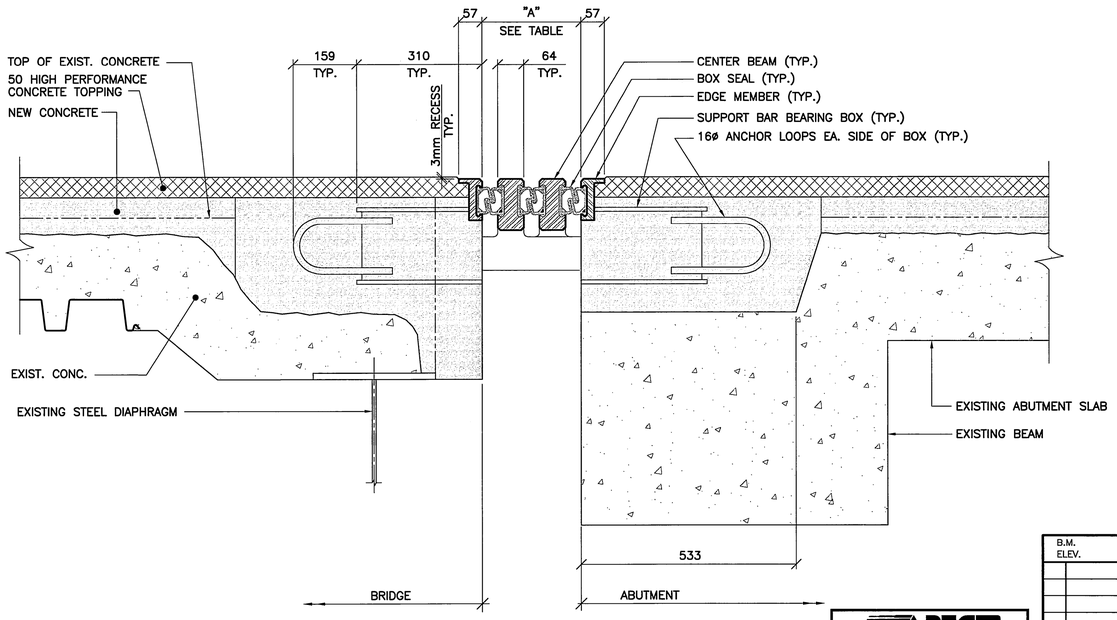

3 — SECTION
1 : 7.5

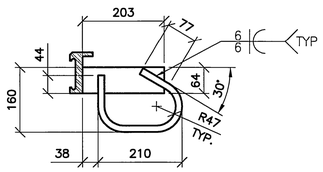

ANCHOR TYPE 'A'
1 : 7.5

TEMPERATURE WIDTH ADJUSTMENT TABLE							
TEMP.	25°C	20°C	15°C	10°C	5°C	0°C	−5°C
"A"	220	230	240	250	260	270	280

EXPANSION JOINT NOTES

1. ALL STEEL COMPONENTS SHALL BE HOT-DIP GALVANIZED.
2. INSTALLATION TEMPERATURE SHALL BE TAKEN AS THE MEAN SHADE TEMPERATURE UNDER THE BRIDGE FOR THE 48 HOURS PRIOR TO CASTING THE JOINT INTO THE DECK.
3. EXPANSION JOINT UNITS AND RELATED MATERIALS SHALL BE INSTALLED IN ACCORDANCE WITH MANUFACTURER'S RECOMMENDATIONS.
4. APPLY GALVALLOY TO ALL FIELD WELDS AND AREAS WHERE GALVANIZING HAS BEEN DAMAGED.
5. PRIOR TO PLACING REINFORCING BARS OR CONCRETE, THE INSTALLATION SHALL BE APPROVED BY THE ENGINEER.
6. IMMEDIATELY PRIOR TO PLACEMENT OF CONCRETE, ALL METAL SURFACES WHICH WILL BE IN CONTACT WITH CONCRETE SHALL BE COATED WITH EPOXY ADHESIVE. RATE OF PLACEMENT OF ADHESIVE SHALL BE SUCH THAT THE ADHESIVE DOES NOT DRY OR SET BEFORE CONCRETE IS PLACED AGAINST IT.
7. LOOSEN OFF ERECTION BOLTS WITHIN 24 HOURS OF CONCRETING TO ALLOW JOINT MOVEMENT DUE TO TEMPERATURE CHANGE.
8. ALL SURFACES IN CONTACT WITH THE JOINT SEALS SHALL BE CLEANED PRIOR TO INSTALLATION OF THE SEALS. SEALS SHALL BE CONTINUOUS ACROSS THE BRIDGE WITH NO SPLICES.
9. ANY ERECTION BOLT AND BLEEDER HOLES SHALL BE FILLED WITH EPOXY GROUT.

APEGM
Certificate of Authorization
Wardrop Engineering Inc.
No. 195 Expiry: April 30, 2006

NO.	REVISIONS	DATE	BY
00	ISSUED FOR TENDER	08.02.05	

B.M. ELEV. F.B.

WARDROP | Engineering Inc.

DESIGNED BY E.F.S. CHECKED BY
DRAWN BY P.S. APPROVED BY
HOR. SCALE: AS NOTED
VERTICAL:
DATE 08.02.05
ACCEPTED BY DATE 08-02-05
RANDY FINGAS, P. ENG
BRIDGES PROJECTS ENGINEER

PROVINCE OF MANITOBA
08/02/05
E.F.G. SHEHATA
Member
23439
REGISTERED PROFESSIONAL ENGINEER

CONSULTANT DRAWING NO.
0600070700-DWG-S1135-00

Winnipeg

THE CITY OF WINNIPEG
PUBLIC WORKS DEPARTMENT
TRANSPORTATION ENGINEERING DIVISION

FORT GARRY TWIN BRIDGES
WESTBOUND STRUCTURE REHABILITATION AND ASSOCIATED ROADWORKS

EXPANSION JOINTS – DETAILS 1

CITY DRAWING NUMBER B173-08-035W
SHEET 35 OF 54
35