Appendix B

Historic Drawings

D347

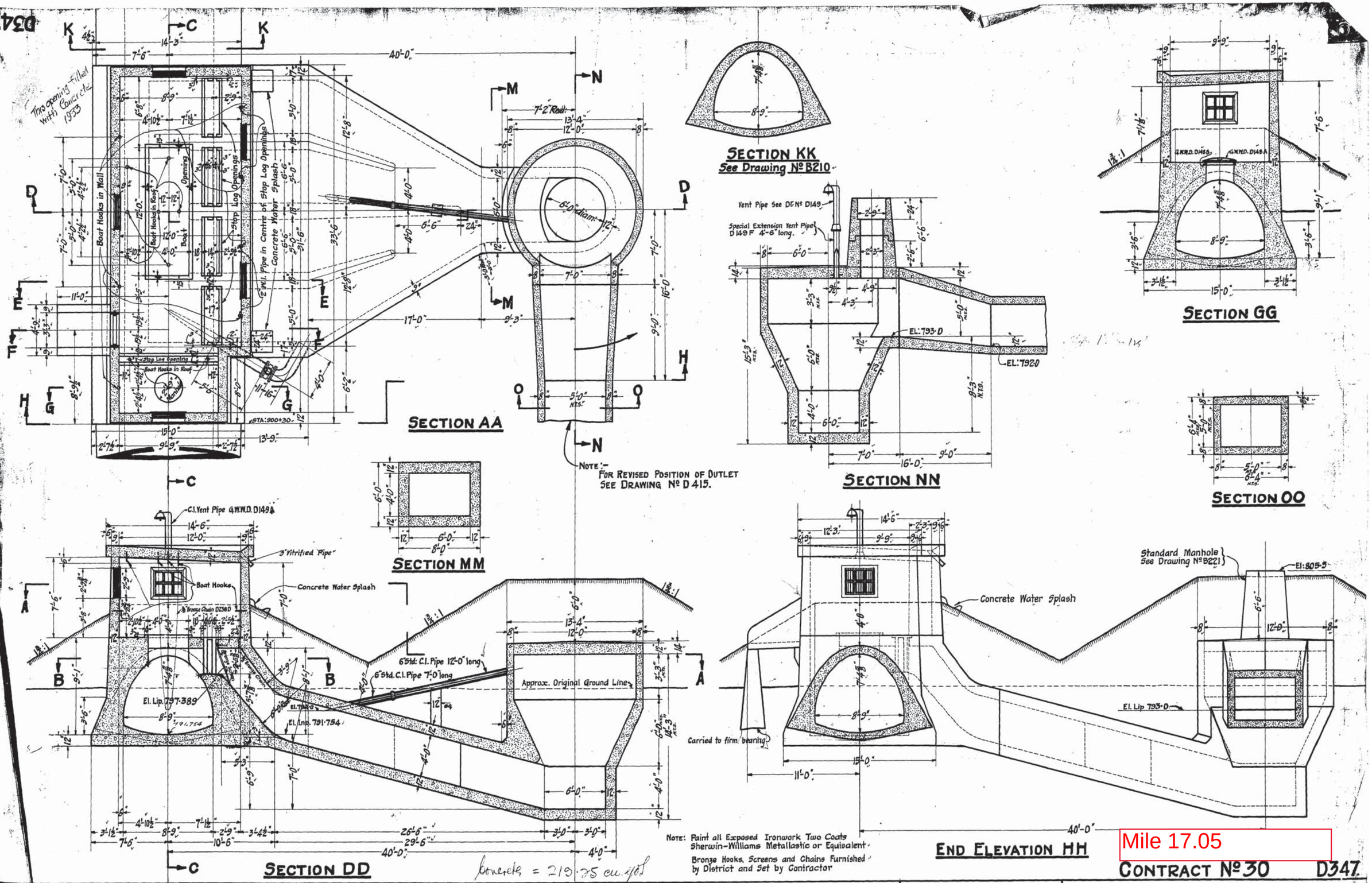

Concrete = 219.25 cu. yds.

Note: Paint all Exposed Ironwork Two Coats Sherwin-Williams Metallastic or Equivalent.
Bronze Hooks, Screens and Chains Furnished by District and Set by Contractor

Mile 17.05

CONTRACT Nº 30 D347

Drawn By: A.M.C.
Traced By: A.M.K.
Checked By: H.
Approved: H. J. Sauer

Dimensions for Sump-Well Revised & Note re Position added, 28th Aug. 1917. A.M.K.
" " " " " also Invert to 12" " 29th " " " "

James H. Fuertes CONSULTING ENGINEER
W. G. Chace CHIEF ENGINEER

GREATER WINNIPEG WATER DISTRICT

DETAIL OF OVERFLOW AND BLOWOFF STRUCTURE AT STA: 900+30

Date: 11-7-1917. Scale: 1/4" = 1 Foot

D248

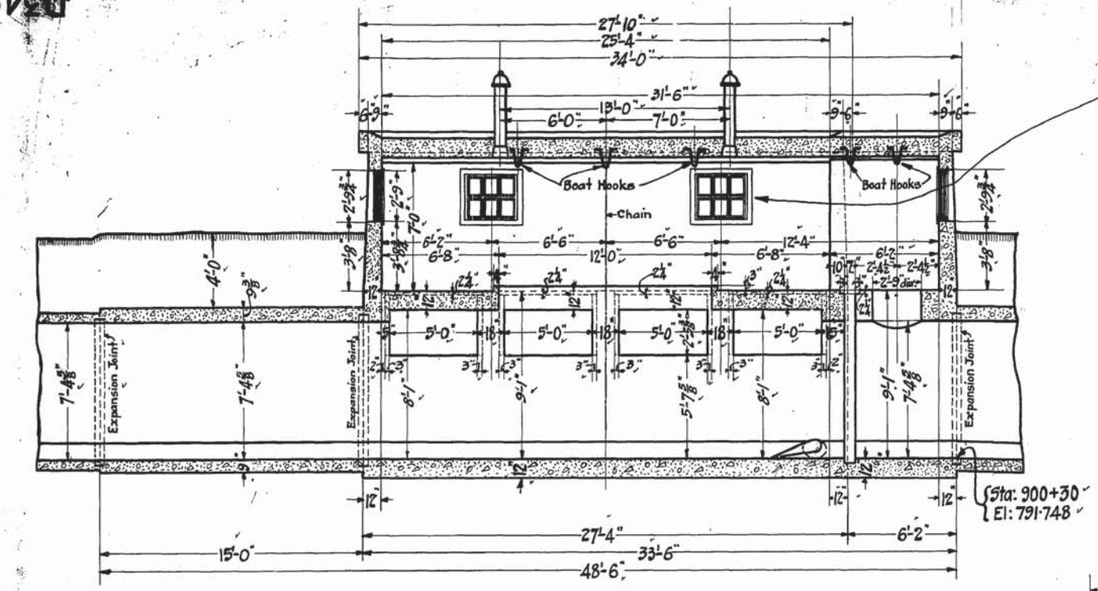

SECTION CC

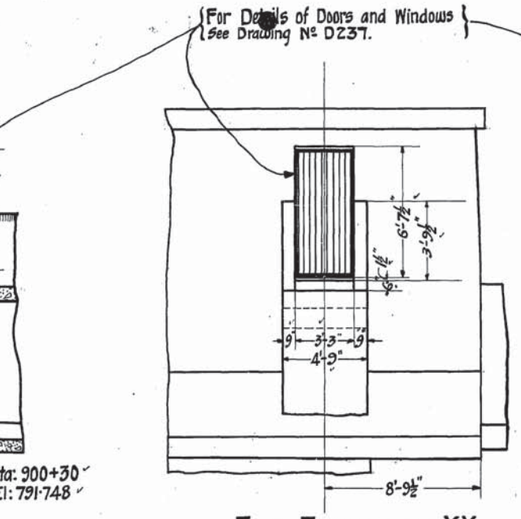

END ELEVATION XX

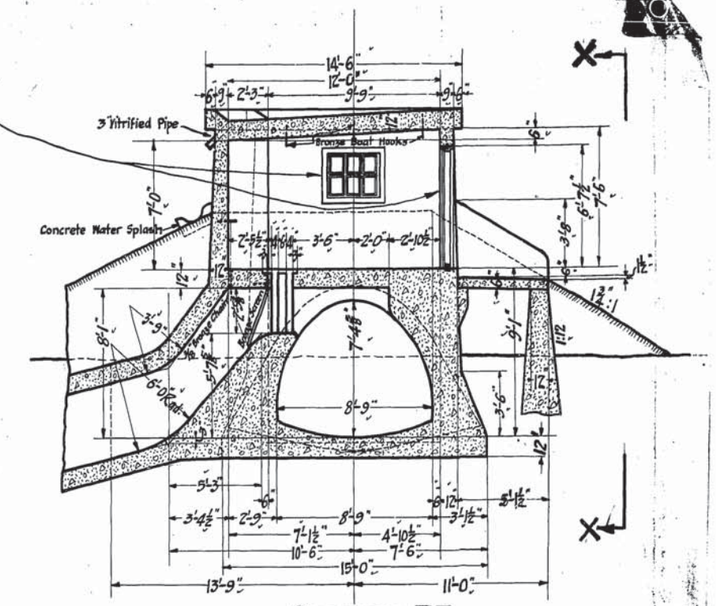

SECTION FF

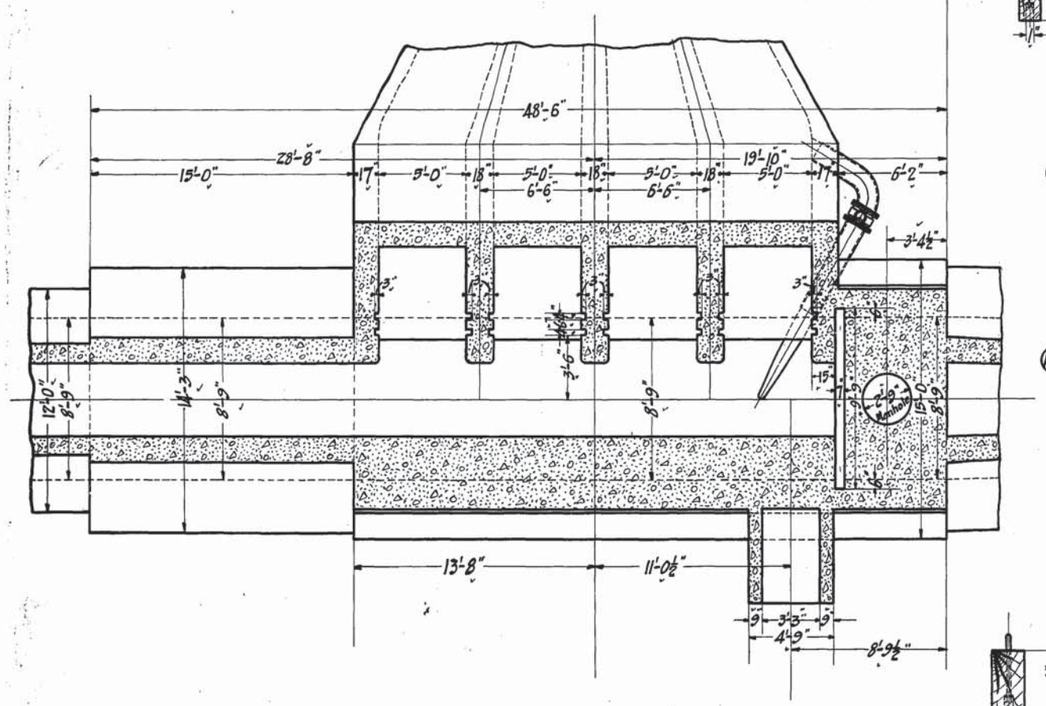

SECTION BB

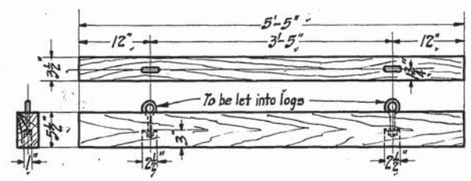

WEIR STOP LOGS, CYPRUS OR FIR.
48 required. (WL)
Scale: 1 in = 1 ft.

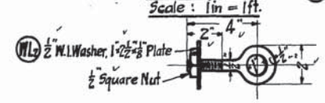

½" W.I. EYEBOLTS (WL)
96 required.
Scale: 3 in. = 1 ft.

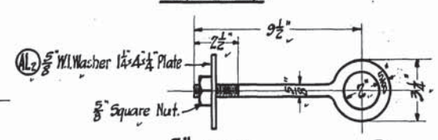

⅝" W.I. EYEBOLTS (AL)
16 required
Scale: 3 in = 1 ft.

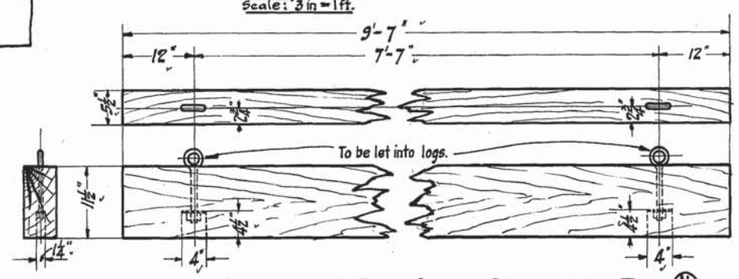

AQUEDUCT STOP LOGS, CYPRUS OR FIR. (AL)
8 required Scale 1 in. = 1 ft.

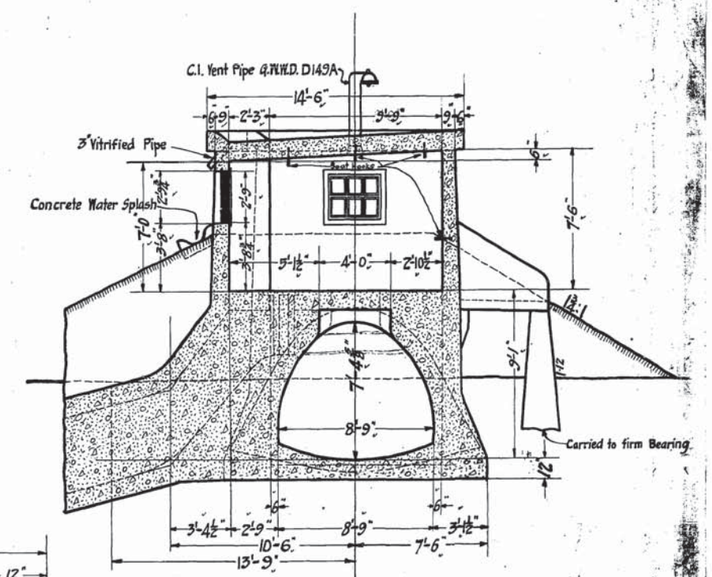

SECTION EE

Mile 17.05

CONTRACT Nº30 D348

Drawn By. A.J.M.C.
Traced By. A.J.M.C.
Checked By. J.H.
Approved. W.L. Chance

ELEVATION XX REVERSED TO SUIT LOCATION OF SECTION. 28th Aug. 1917. A.J.M.C.
INVERT REVISED TO 12" also Rd. X in 9" to 9" 29th " " "

James H. Everties
CONSULTING ENGINEER.
W.L. Chance
CHIEF ENGINEER.

GREATER WINNIPEG WATER DISTRICT
DETAIL OF OVERFLOW & BLOWOFF STRUCTURE
AT STA: 900+30
Date 17-7-1917 Scale: ½" = 1 Foot

D217

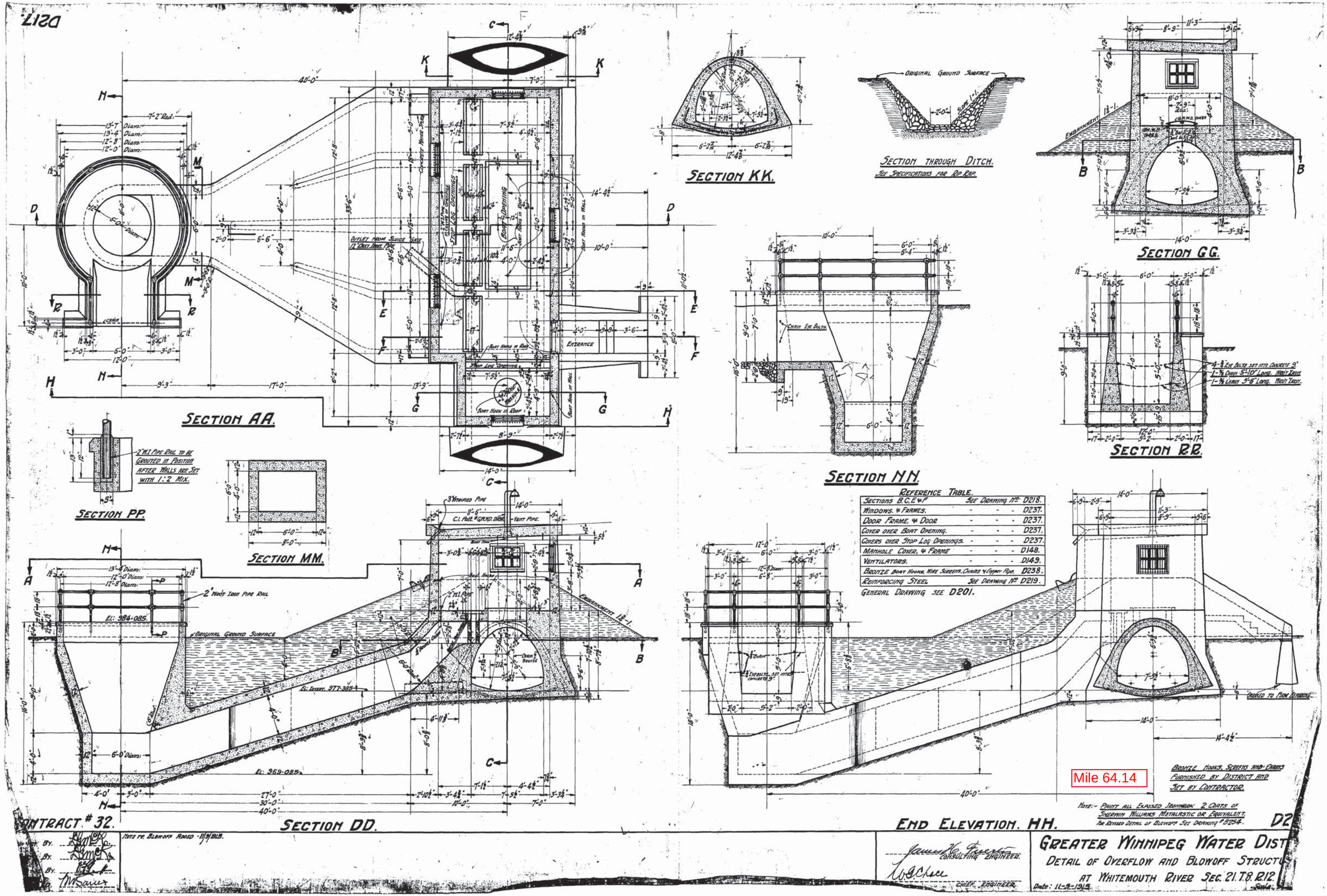

REFERENCE TABLE.

SECTIONS B.C.E.&F	SEE DRAWING No. D218.
WINDOWS. & FRAMES.	D237.
DOOR FRAME. & DOOR	D237.
COVER OVER BOAT OPENING.	D237.
COVERS OVER STOP LOG OPENINGS.	D237.
MANHOLE COVER. & FRAME	D148.
VENTILATORS.	D149.
BRONZE BOAT HOOKS, WIRE SCREENS, CHAINS & COPPER PIPE.	D238.
REINFORCING STEEL	SEE DRAWING No. D219.

GENERAL DRAWING SEE D201.

Mile 64.14

CONTRACT # 32.

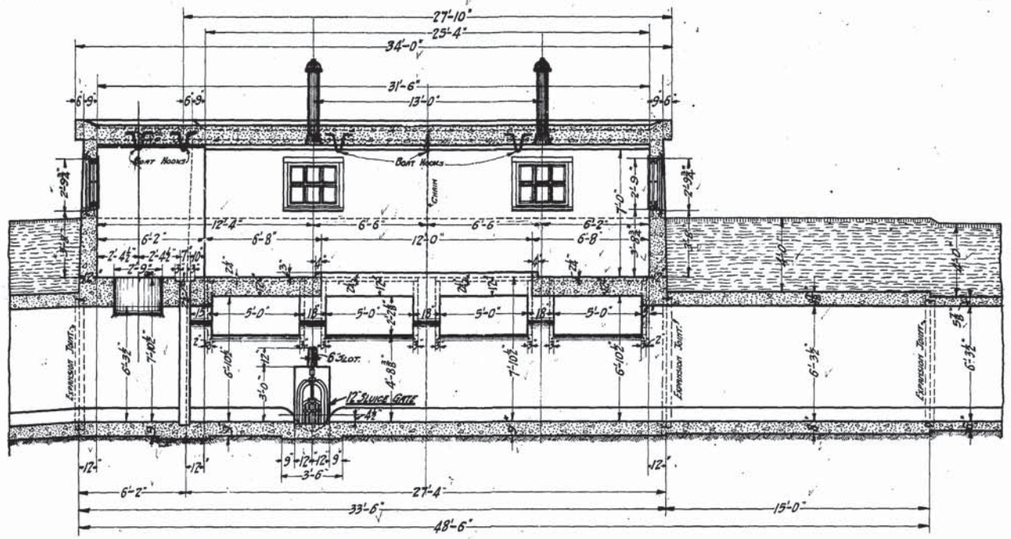

SECTION CC.

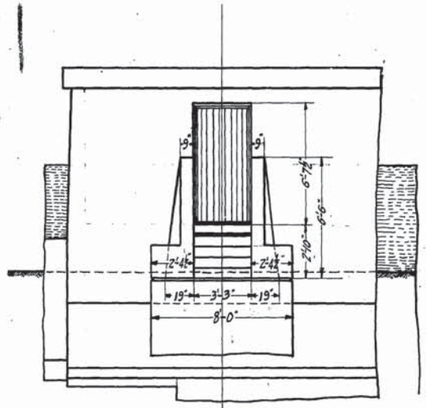

SOUTH ELEVATION XX.

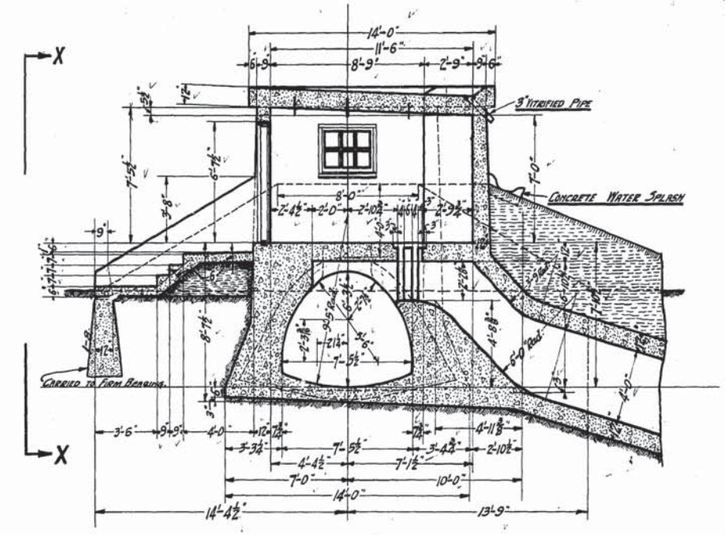

SECTION FF.

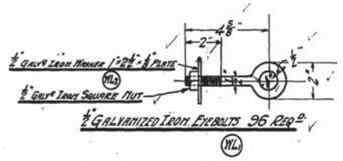

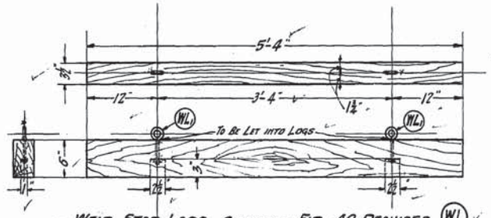

WEIR STOP LOGS CYPRUS OR FIR 48 REQUIRED

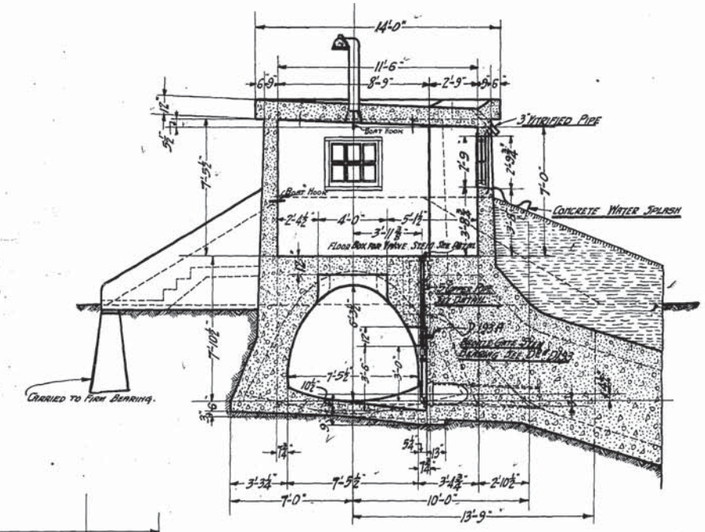

SECTION EE.

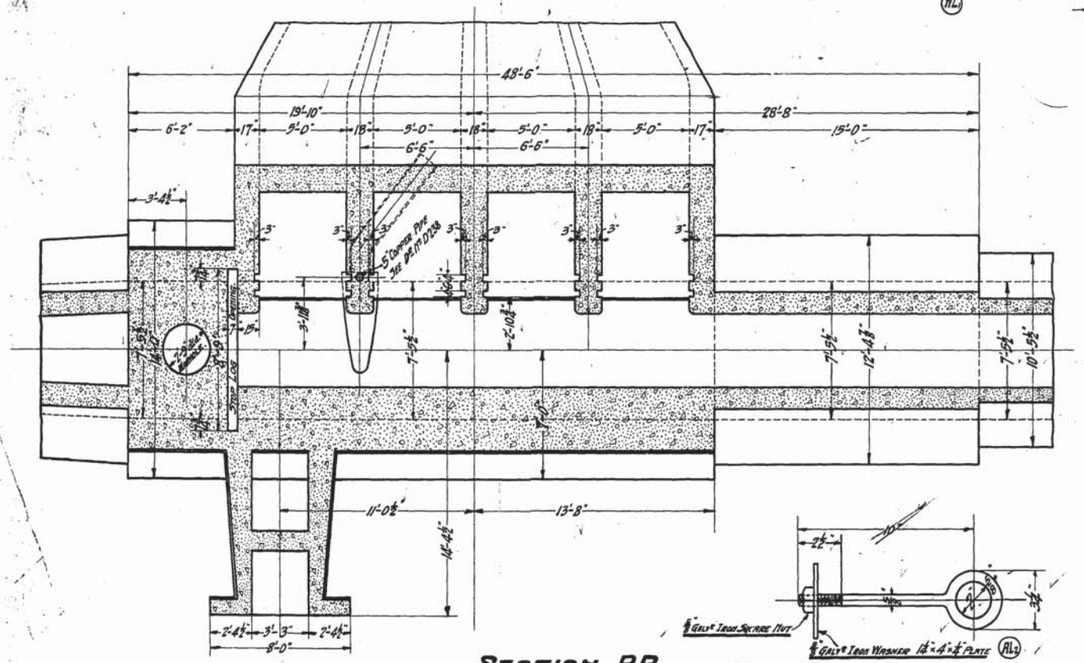

SECTION BB.

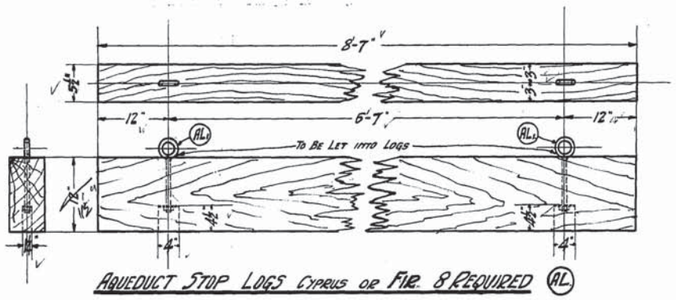

AQUEDUCT STOP LOGS CYPRUS OR FIR 8 REQUIRED

NOTE: FOR REVISED DETAIL OF BLOWOFF SEE DRAWING No. B254.

Mile 64.14

CONTRACT #32.

D218.

Drawn By:

Detail of Floor Box for Valve Stem taken out and note re Blowoff Added – 11-9-1915.

Consulting Engineer

Chief Engineer

GREATER WINNIPEG WATER DISTR

DETAIL OF OVERFLOW AND BLOWOFF STRUCT

AT WHITEMOUTH RIVER SEC. 21. T.8. R.

Date:-12-5-1913.

D266

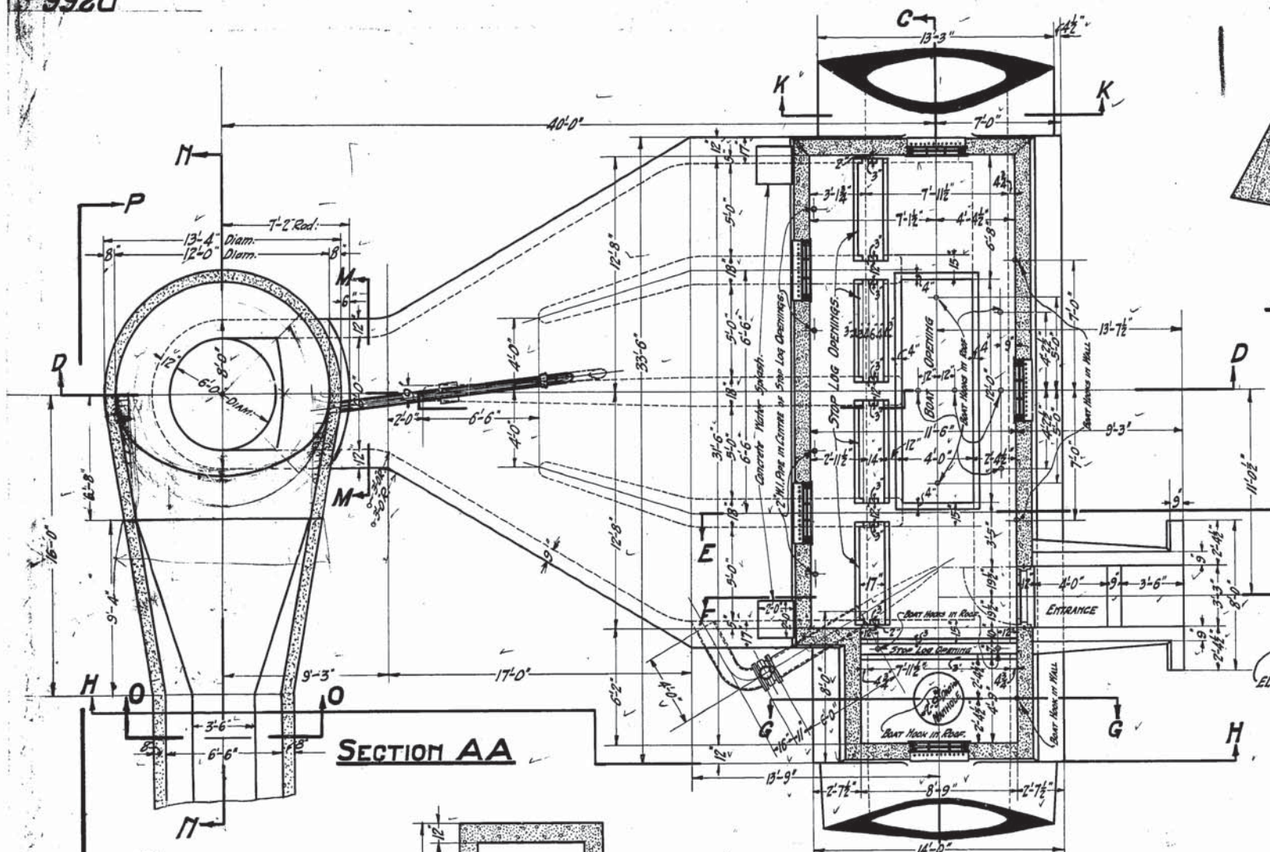

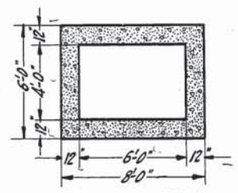

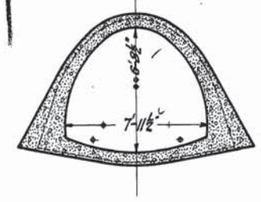

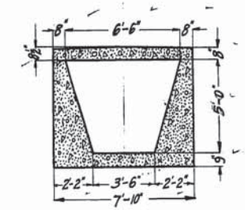

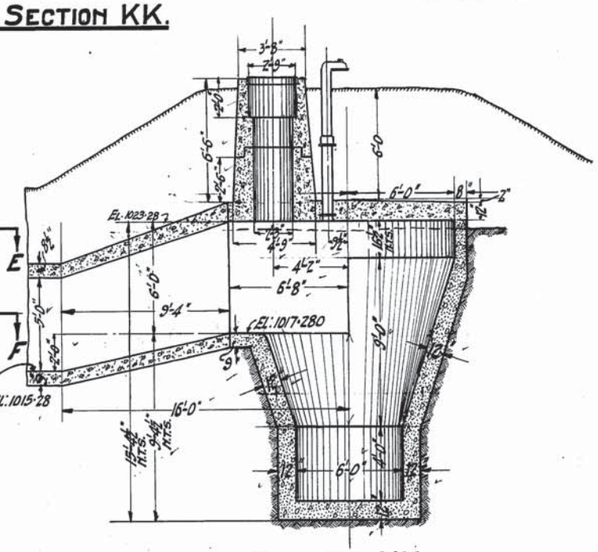

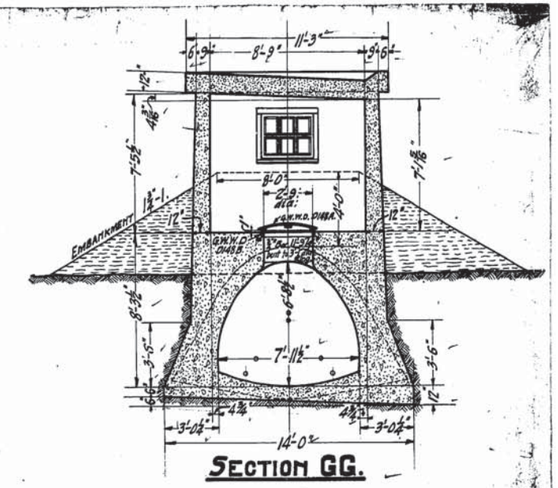

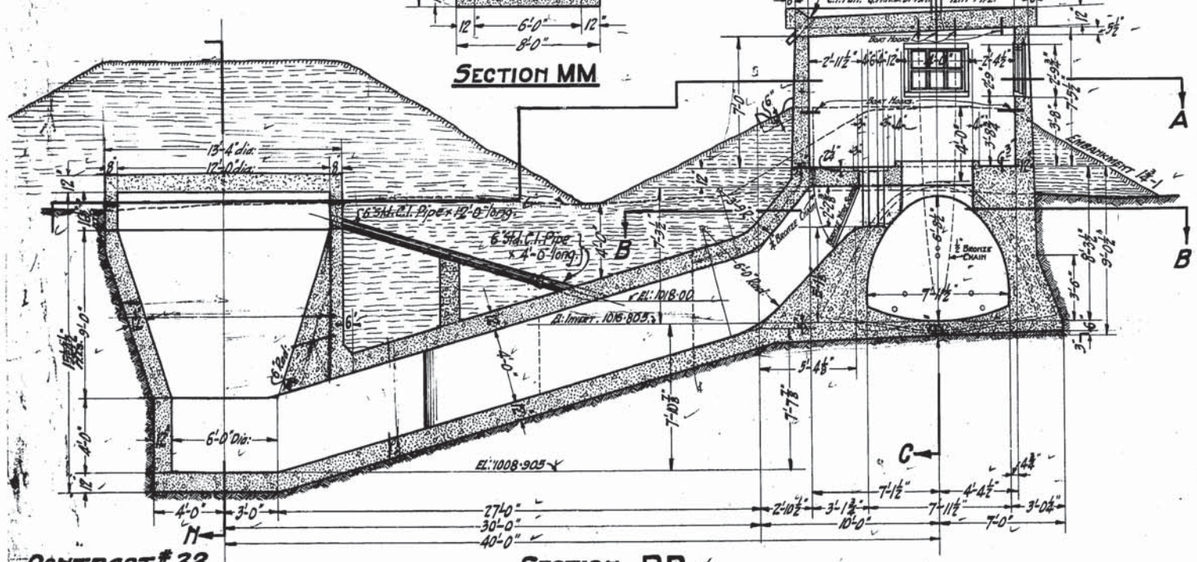

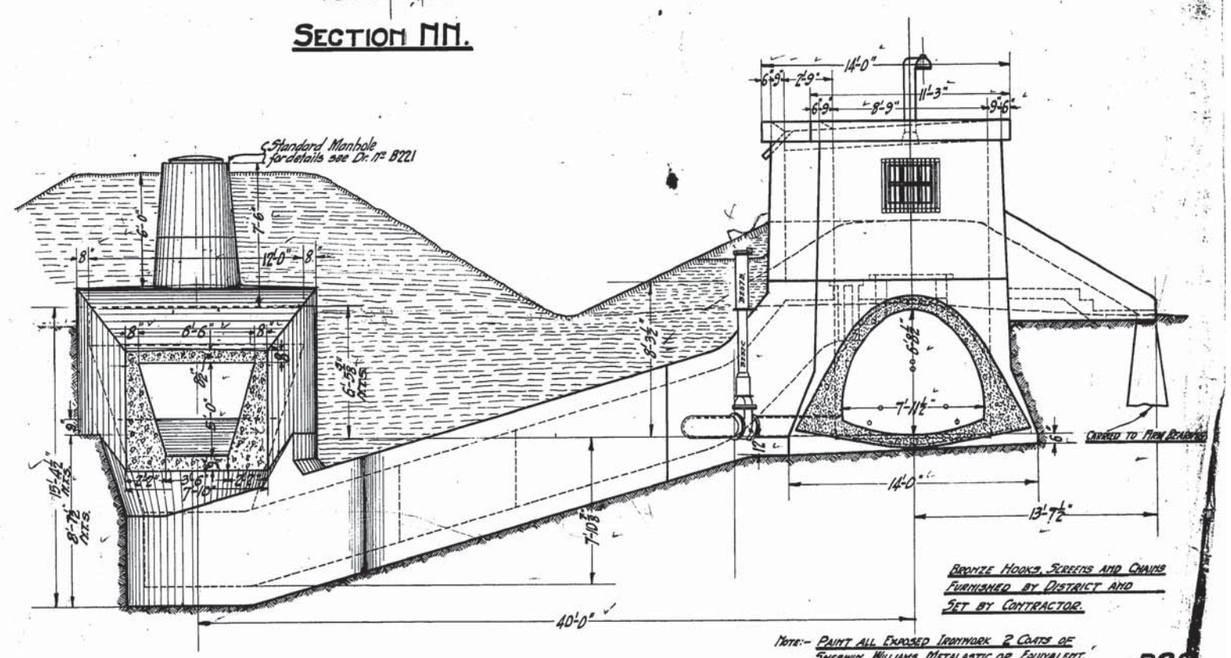

CONTRACT # 33.

Drawn By. Traced By. Checked By. Approved.

James H. Forsyth Consulting Engineer.

GREATER WINNIPEG WATER DISTRICT

DETAIL OF OVERFLOW AND BLOWOFF STRUCTURE

D26

Mile 73.69

D267

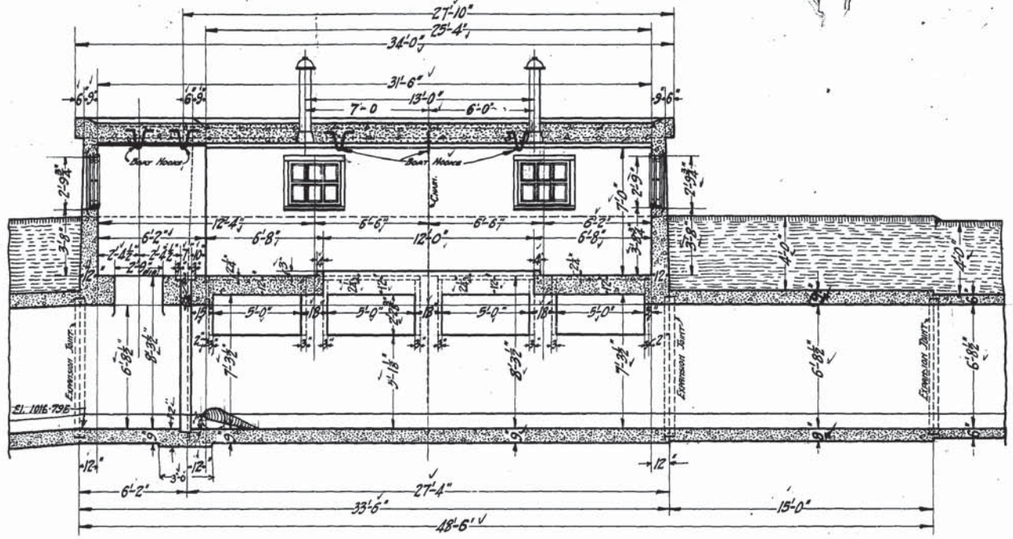

SECTION CC.

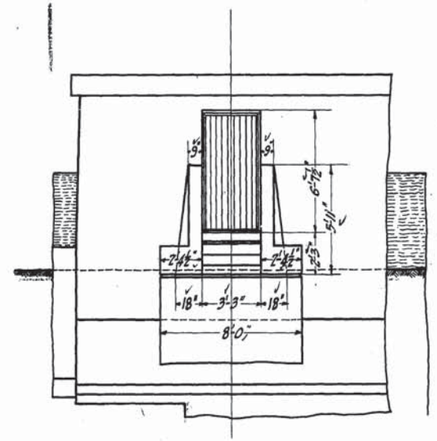

SOUTH ELEVATION XX.

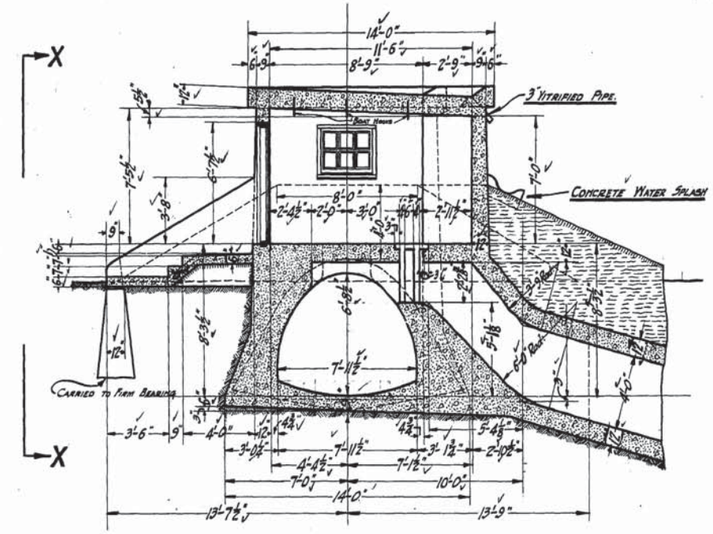

SECTION FF

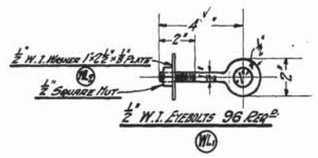

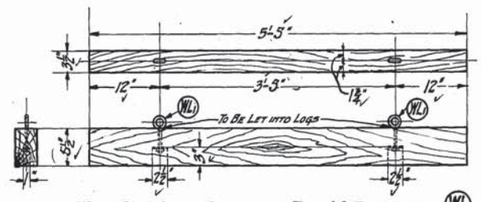

WEIR STOP LOGS. CYPRUS OR FIR. 48 REQUIRED

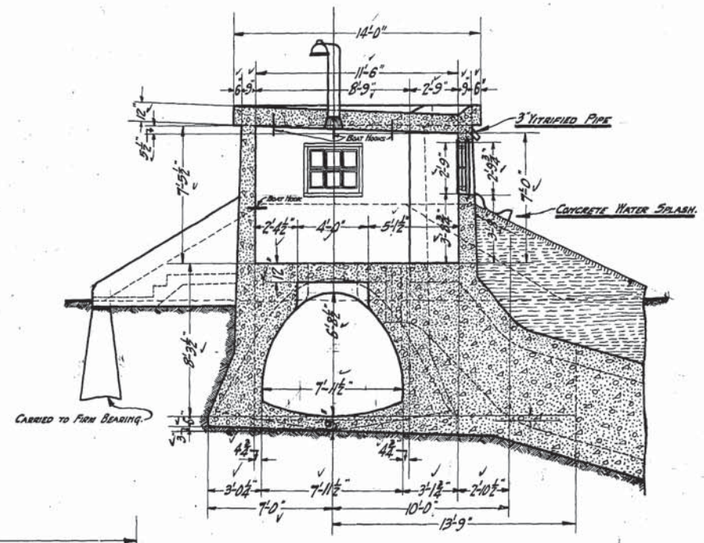

SECTION EE.

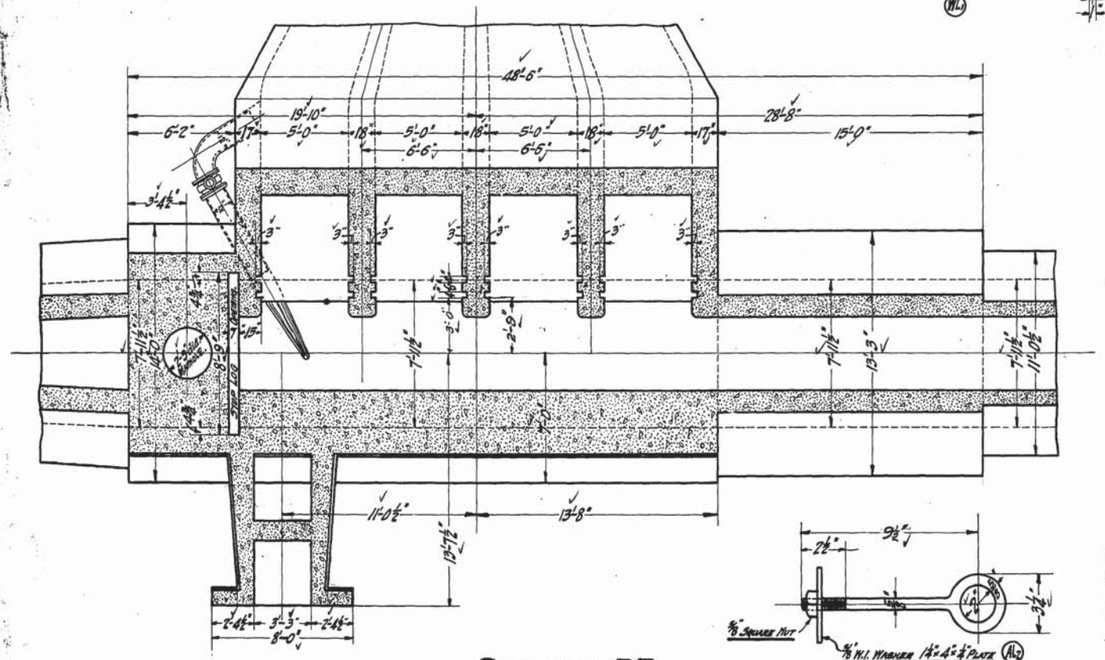

SECTION BB.

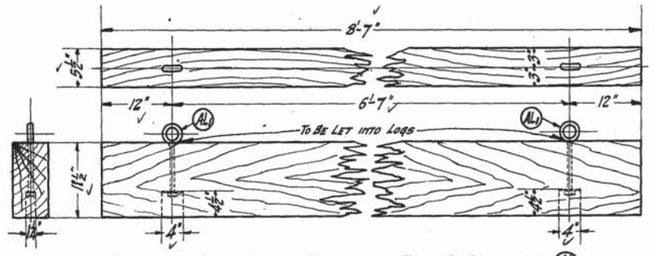

AQUEDUCT STOP LOGS CYPRUS OR FIR 8 REQUIRED

CONTRACT # 33

Mile 73.69

D267.

Drawn By: Adams
Traced By: Adams
Checked By:
Approved: W.S. Chase

James H. Fuertes
Consulting Engineer.
W.S. Chase
Chief Engineer.

GREATER WINNIPEG WATER DISTRICT.
DETAIL OF OVERFLOW AND BLOWOFF STRUCTURE
AT BIRCH RIVER SEC. I. T.8. R.13.
Date:- 4-10-1915. Scale: ¼" = 1 Ft.