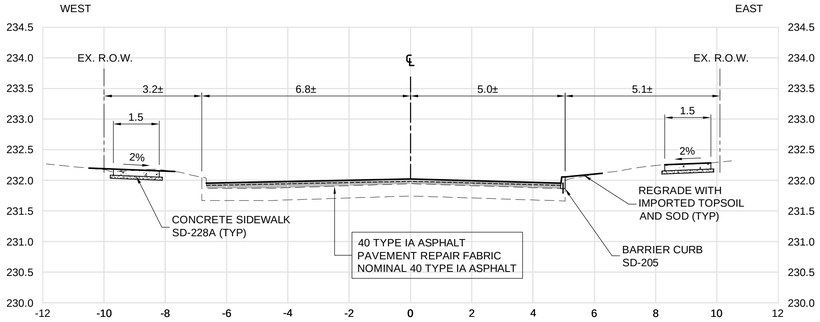

G 15 26 NATHANIEL STREET - STA. 1+055
SCALE: H=1:100, V=1:50

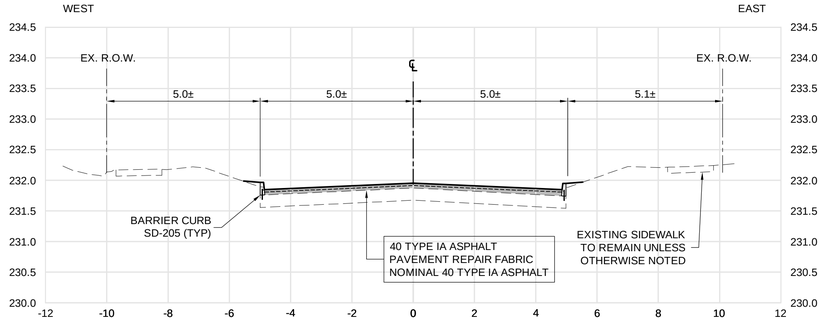

H 15 26 NATHANIEL STREET - STA. 1+085
SCALE: H=1:100, V=1:50

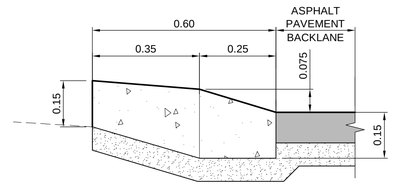

2 22-24 26 CONCRETE DRIVEWAY TIE-IN
SCALE: 1:10

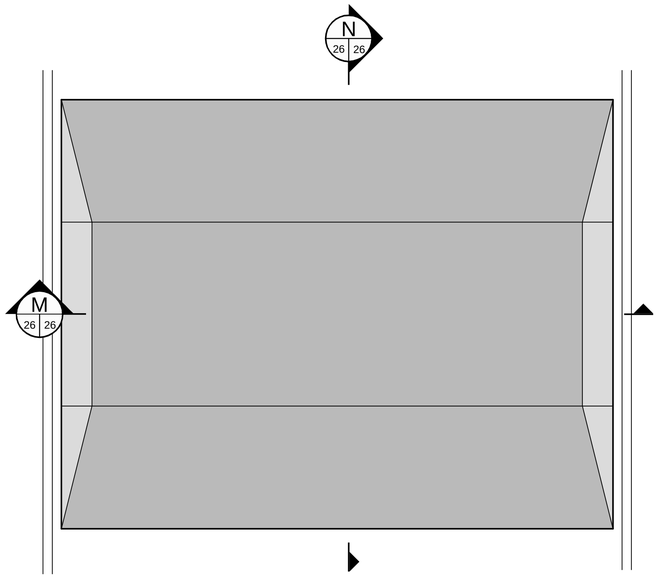

1 9,10,12,13 26 SPEED TABLE DETAIL - PLAN
SCALE: 1:50

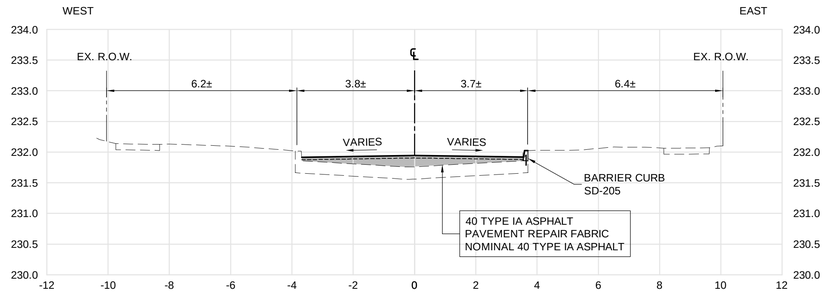

I 16 26 NATHANIEL STREET - STA. 1+225
SCALE: H=1:100, V=1:50

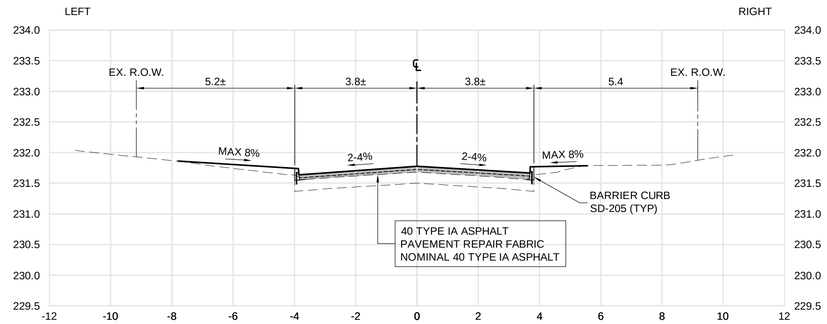

J 18 26 SYRACUSE CRESCENT - STA. 1+100
SCALE: H=1:100, V=1:50

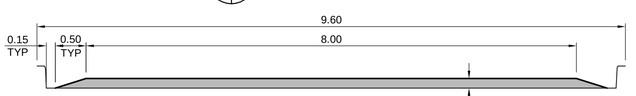

M 26 26 SECTION
SCALE: H=1:50, V=1:25

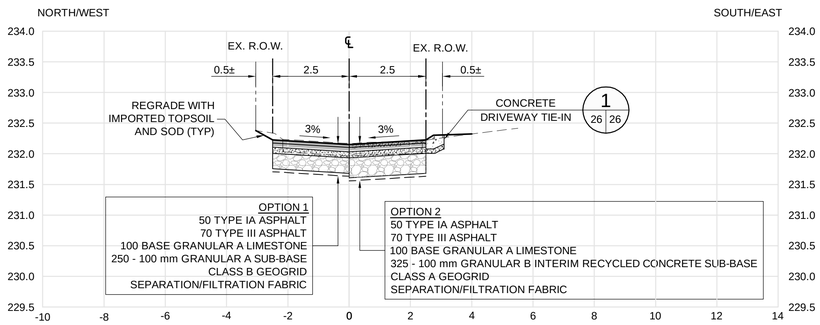

K 23 26 ALLEY (ROCKWOOD-WILTON) - STA. 1+130
SCALE: H=1:100, V=1:50

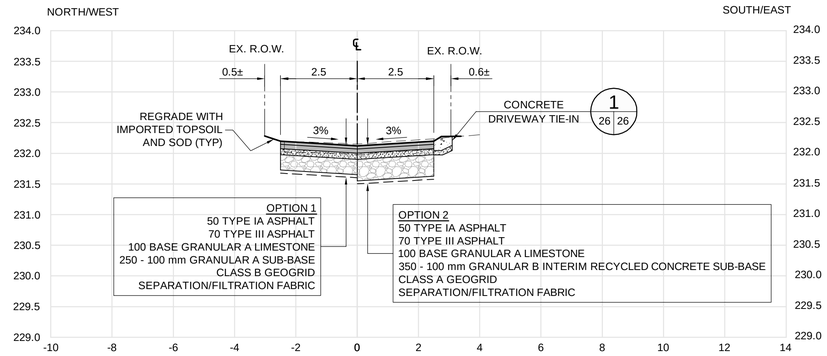

L 24 26 ALLEY (YALE-HARVARD) - STA. 1+100
SCALE: H=1:100, V=1:50

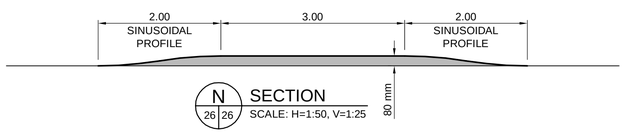

N 26 26 SECTION
SCALE: H=1:50, V=1:25

PRELIMINARY ONLY
NOT FOR CONSTRUCTION

SINUSOIDAL SPEED HUMP DEVELOPMENT

DISTANCE (m)	0.000	0.125	0.250	0.375	0.500	0.625	0.750	0.875	1.000	1.125	1.250	1.375	1.500	1.625	1.750	1.875	2.000
FINISHED HEIGHT (mm)	0	1	3	7	12	18	25	32	40	48	55	62	68	73	77	79	80

METRIC

WHOLE NUMBERS INDICATE MILLIMETRES
DECIMALIZED NUMBERS INDICATE METRES

UNDERGROUND STRUCTURES

SUPV. U/G STRUCTURES DATE

LOCATION OF UNDERGROUND STRUCTURES AS SHOWN ARE BASED ON THE BEST INFORMATION AVAILABLE, BUT NO GUARANTEE IS GIVEN THAT ALL EXISTING UTILITIES ARE SHOWN OR THAT THE GIVEN LOCATIONS ARE EXACT. CONFIRMATION OF EXISTENCE AND EXACT LOCATION OF ALL SERVICES MUST BE OBTAINED FROM THE INDIVIDUAL UTILITIES BEFORE PROCEEDING WITH CONSTRUCTION.

B.M. ELEV.

NO.	REVISIONS	DATE	BY
0	ISSUED FOR TENDER	21/02/23	DBW

DESIGNED BY JAT
DRAWN BY TJH
CHECKED BY JNC
APPROVED BY DBW
HOR. SCALE AS NOTED
VERTICAL AS NOTED
DATE

DILLON CONSULTING

RELEASED FOR CONSTRUCTION
DATE

ENGINEER'S SEAL

TENDER DRAWING
NOT TO BE USED FOR CONSTRUCTION

CONSULTANT PROJECT NUMBER
20-2958

Winnipeg

THE CITY OF WINNIPEG
PUBLIC WORKS DEPARTMENT

2021 LOCAL STREETS RENEWAL PROGRAM 21-R-05: DOWKER AVENUE, RILEY CRESCENT AND VARIOUS OTHER LOCATIONS

CITY DRAWING NUMBER

SHEET 26 OF 28

SECTIONS AND DETAILS (2 OF 2)

CONSULTANT DRAWING NUMBER

C:\pw working directory\projects 2020\40jh\dms32250\2020958-CT-CON-SECTIONS.dwg