Winnipeg

The City of Winnipeg

Water & Waste Department

Electrical Design Guide

Document Code: 510276-0000-47ER-0001

Revision: 05

Approved By:	Duane Griffin, Branch Head- WW Planning and Projects	Feb 14, 2020 Date

Original Rev 00 Preparation by SNC Lavalin Inc.	
Prepared By:	C. Reimer N. Bradoo B. Cleven
Checked By:	C. Weiss-Bundy E. Ryczkowski

REVISION REGISTER

Rev.	Description	Date	By	Checked	Approved
00	Issued for City Use	2013-10-31	C. Reimer	C. Weiss Bundy E. Ryczkowski	C. Reimer
01	General Revisions	2015-12-01	C. Reimer	R. Greening	G. Patton
02	General Revisions	2017-03-24	C. Reimer	R. Greening	
03	General Revisions	2019-06-21	D. S. Allen	E. Campbell/K. Schimke	G. Patton
04	Revised with Ownership Information and Revision Procedure	2019-12-03	L.Harrington	E. Campbell C. Wiebe	C. Wiebe
05	Updated Arc Flash section and General Revisions	2020-01-27	E.Campbell	D. Allen K. Schimke	D. Griffin

This document is owned and maintained by the Wastewater Planning and Project Delivery Branch of the Engineering Services Division. For questions, comments or revisions please contact the Wastewater Planning and Project Delivery Branch Head.

This page is intentionally blank.

TABLE OF CONTENTS

1 Introduction 13
1.1 Scope of the Standard 13
1.2 Application 13
1.3 Document Revisions 14
1.4 Definitions 14

2 General 17
2.1 General Design Requirements 17
2.2 References 17
2.2.1 General 17
2.2.2 City of Winnipeg Standards 18
2.2.3 Codes and Standards 18
2.2.4 Design Codes and Standards 18
2.2.5 Units 19
2.3 Identification 20
2.3.1 Identification Lamacoids 20

3 Design Requirements 23
3.1 Service Conditions 23
3.2 Voltage Levels 23
3.2.1 System Voltage Levels 23
3.3 System Configuration Concepts 23
3.3.1 Configuration A - 208/120 V 25
3.3.2 Configuration B – 600 V Distribution 26
3.3.3 Configuration C - 600 V Distribution with Portable Generator Provision 27
3.3.4 Configuration D - 600 V Distribution with Standby Generator 28
3.3.5 Configuration E - 600 V Distribution with Essential Bus 29
3.3.6 Configuration F - 600 V Redundant with Standby Generation 30
3.3.7 Configuration G - MV Distribution 31
3.3.8 Configuration H - MV Distribution with Essential Bus 32
3.3.9 Configuration I - MV Redundant with Essential Bus 34
3.3.10 Configuration J - MV Redundant with Integrated Generation 36
3.3.11 System Configuration Selection 38
3.4 Redundancy Requirements 39
3.4.1 Wastewater Treatment Facilities 39
3.5 Electrical Service 41
3.6 Classification of Loads 42
3.6.1 Wastewater Treatment Facilities 42
3.7 Distribution Capacity 43
3.8 System Grounding 44
3.9 Short Circuit Current Rating 45
3.10 Harmonics 47
3.11 Environmental 47

4 Wiring and Cabling 49
4.1 Type Identification 49
4.1.1 Power Conductors 49
4.1.2 Bonding Conductors 50
4.1.3 Neutral Conductors 50

4.1.4 Examples ... 51
4.2 Conductor Material ... 51
4.3 Insulation Ratings ... 52
4.4 Power Distribution ... 53
4.4.1 Conduits vs. Cables ... 53
4.5 Cable Types and Ratings ... 54
4.5.1 Cable Requirements ... 54
4.6 Conductor Sizes ... 55
4.7 Conduit Materials and Sizes ... 56
4.8 Conduit Colour Coding ... 58
4.9 Device and Pull Boxes ... 58
4.10 Cable Trays ... 59
4.10.1 General ... 59
4.11 Buried Installation Requirements ... 61
4.12 Terminations ... 62
4.12.1 Power Wiring – Medium Voltage ... 62
4.12.2 Power Wiring – Low Voltage (< 750 V) ... 63
4.12.3 Control Wiring – Low Voltage ... 63
4.13 Framing and Support Systems ... 63
4.14 Segregation of Systems ... 64
4.15 Redundant Cables ... 66

5 Lighting ... 67
5.1 Fixture Type Selection ... 67
5.2 Lighting Control ... 69
5.3 Illumination Levels ... 71
5.4 Fixture Location Requirements ... 75
5.5 Emergency Lighting and Associated Power Source ... 75
5.6 Requirements for Exit Signs ... 78

6 Equipment Design Requirements ... 79
6.1 DC Power Supply ... 79
6.1.1 125 VDC Power Supplies ... 79
6.1.2 24 VDC Power Supplies ... 80
6.2 Electric Heating ... 80
6.2.1 General ... 80
6.2.2 Heater Voltage Levels ... 80
6.3 Motor Control Centres ... 81
6.3.1 Low Voltage MCC (600 V) ... 81
6.3.2 Medium Voltage MCC ... 82
6.4 Moulded Case Circuit Breakers ... 83
6.5 Neutral Grounding Resistors ... 83
6.6 Panelboards ... 83
6.7 Receptacles ... 84
6.7.1 General ... 84
6.7.2 Welding Receptacles ... 85
6.7.3 Convenience Receptacles ... 85
6.7.4 Maintenance Receptacles ... 86
6.7.5 Dedicated Purpose Receptacles ... 86

6.8 Soft Starters ... 86
6.8.1 Design Requirements ... 86
6.8.2 Bypass Starters ... 88
6.8.3 Supervisory Monitoring and Control ... 88
6.9 Switchgear – Low Voltage ... 88
6.10 Switchgear – Medium Voltage ... 90
6.11 Transformers ... 91
6.12 Transient Voltage Surge Suppressors ... 94
6.13 Unit Substations ... 94
6.14 Uninterruptible Power Supplies ... 95
6.14.1 Application Requirements ... 95
6.14.2 Design Requirements ... 95
6.14.3 Redundancy ... 96
6.14.4 Sizing Factors ... 96
6.14.5 Battery Runtimes ... 97
6.14.6 Other Design Requirements ... 97
6.15 Variable Frequency Drives ... 98
6.15.1 General ... 98
6.15.2 Medium Voltage (4160 V) VFD Requirements ... 99
6.15.3 Low Voltage (600 V) VFD Requirements ... 100
6.15.4 Bypass Starters ... 100
6.15.5 Supervisory Monitoring and Control ... 101
6.15.6 Functional Requirements ... 101

7 Motors ... 103
7.1 General Requirements ... 103
7.2 Motor Voltage Levels ... 104
7.3 Special Requirements ... 104
7.4 Acceptable Methods of Control ... 105
7.5 Control Circuits ... 106
7.5.1 Motor Restart Control ... 106
7.6 General Protection Requirements ... 106
7.7 Special Protection Requirements ... 108
7.8 Local Controls ... 109
7.8.1 Wastewater Collections & Land Drainage Facilities ... 109
7.8.2 Wastewater Treatment Plants ... 110
7.9 Local Disconnect Switches ... 111
7.9.1 Wastewater Collections & Land Drainage Facilities ... 111
7.9.2 Wastewater Treatment Plants ... 111
7.10 Emergency Stop Systems ... 111

8 Equipment Application Requirements ... 113
8.1 HVAC Equipment ... 113

9 Power System Monitoring ... 115
9.1 Pilot Lights ... 115
9.2 Power Meter Requirements ... 115
9.3 HMI / SCADA Monitoring and Control Requirements ... 119
9.3.2 Additional Requirements for Wastewater Lift Stations ... 121
9.3.3 Additional Requirements for Wastewater Flood Stations ... 121

10 Protection ... 123
10.1 General ... 123
10.2 Instrument Transformers ... 123
10.3 Protection for Distribution <= 600 V ... 123
10.3.1 Circuit Breakers ... 123
10.3.2 Fuses ... 124
10.3.3 Ground Fault Protection ... 124
10.4 Protection for Medium Voltage Distribution ... 125
10.4.2 Ground Fault Protection ... 125
10.5 Resistance Grounding Ground Fault Detection Systems ... 126
10.5.1 Low Voltage/High Resistance Grounding ... 126
10.5.2 Low Resistance Grounding ... 126

11 Standby and Emergency Generation ... 127
11.1 General Requirements ... 127
11.2 Emergency Loads ... 130
11.3 Essential Loads ... 131
11.4 Generator Set Sizing ... 132
11.5 Temporary Generator Connection ... 133

12 Hazardous Locations ... 135
12.1 General ... 135
12.2 Wastewater Facilities ... 135
12.3 Design Requirements ... 135
12.3.1 Class I, Zone 0 Locations ... 135
12.3.2 Class I, Zone 1 Locations ... 135
12.3.3 Class I, Zone 2 Locations ... 137

13 Arc Flash HAZARD study ... 139
13.1 General ... 139
13.2 Design Requirements ... 140
13.3 Typical Arc Flash Labels ... 140

14 Grounding ... 143
14.1 General ... 143
14.2 Equipment Bonding and Grounding ... 143
14.2.1 General ... 143
14.2.2 Low Voltage Systems (< 750 V) ... 143
14.2.3 Medium Voltage System ... 144
14.3 Lightning Protection ... 144
14.4 Grounding Study ... 145

15 Power Quality ... 147
15.1 General ... 147
15.2 Power Factor Correction ... 147
15.3 Application Requirements and Configurations ... 148
15.3.2 Load Power Factor Correction ... 149
15.3.3 Decentralized Bulk Power Factor Correction ... 150
15.3.4 Centralized Bulk Power Factor Correction ... 150
15.4 Capacitor Units ... 151

16 Other Systems ... 153
16.1 Fire Alarm System ... 153
16.1.1 General Requirements ... 153
16.1.2 Drawing Requirements ... 153
16.2 Voice Communications ... 154
16.2.1 Telephone ... 154
16.2.2 Public Address (PA) System ... 154
16.3 Data Communications ... 154
16.3.1 Cabling ... 154
16.3.2 Raceways ... 155
16.4 Security Systems ... 155
16.4.1 Basic Requirements ... 155
16.4.2 Wastewater Treatment Facilities ... 155
17 Packaged Systems ... 157
17.1 General Requirements ... 157
18 Electrical Rooms ... 159
18.1 General Requirements ... 159
18.2 Space and Location Requirements ... 160
18.3 Redundancy Requirements ... 160
18.4 Ventilation Requirements ... 160
19 Engineering Design Team Responsibilities ... 163
19.1 General ... 163
19.2 Drawings ... 164
19.2.1 Cable Tray Layouts ... 164
19.2.2 Electrical Room Layouts ... 165
19.2.3 Equipment Plan Layout Drawings ... 165
19.2.4 Fire Alarm and Security Plan ... 166
19.2.5 Fire Alarm Riser Diagram ... 166
19.2.6 Grounding Diagrams ... 167
19.2.7 Hazardous Location Plan Drawings ... 167
19.2.8 Lighting Plan Drawings ... 168
19.2.9 Lightning Protection Drawings ... 168
19.2.10 MCC Layout Drawing ... 169
19.2.11 MCC Schedule ... 170
19.2.12 Motor Connection Diagram ... 171
19.2.13 Motor Starter Schematics ... 171
19.2.14 PA Riser Diagram ... 171
19.2.15 Panel Schedules ... 172
19.2.16 Power Distribution Switching Diagrams ... 173
19.2.17 Security Riser Diagram ... 173
19.2.18 Single Line Diagrams ... 173
19.2.19 Switchgear Three-Line Diagram ... 175
19.3 Other Documents ... 175
19.3.1 Cable Schedule ... 175
19.3.2 Lamacoid Schedule ... 176
19.3.3 Protection Settings Datasheets ... 176
19.4 Design Calculations and Studies ... 178
19.4.1 General ... 178
19.4.2 Voltage Stability Study ... 178

19.4.3 Short Circuit, Coordination and Arc Flash Study 178
19.4.4 Harmonic Studies 179
19.4.5 Instrument Transformer Sizing Calculations 179
19.5 Example - Typical Deliverables for a Lift Station 181

20 Sample Drawings 183

1 INTRODUCTION

This Water and Waste Department Electrical Design Guide is intended to serve as a reference for consistent design of new electrical systems for City of Winnipeg owned facilities. This document provides design requirements to department personnel, as well as external design engineers, regarding electrical design standards and requirements.

1.1 Scope of the Standard

These design requirements will apply to the following facilities:

- Water treatment plants
- Water pumping stations
- Wastewater treatment plants
- Flood pumping stations
- Wastewater lift pumping stations
- Land drainage and underpass pumping stations.
- Other collections facilities including pumping.

1.2 Application

The scope and intent of this document is to convey general design guidance regarding electrical systems at Water and Waste Department facilities. This document addresses specifics related to equipment type, selection, and configuration; however the designs are presented without knowledge of the specific process implementation. It is not within the scope of this document to provide detailed design direction, and it will be the responsibility of the respective system designers to fully develop the electrical design details with general conformance to the concepts presented herein. This standard shall not be construed as comprehensive engineering design requirements or negate the requirement for professional engineering involvement. Any design must be executed under the responsibility and seal of the respective engineer in each instance, and must be performed in conformance with all applicable codes and standards, as well as good engineering practice.

Where significant deviations from this standard are deemed to be appropriate by the design engineer, these shall be approved by the City. As technology evolves and new application requirements are identified, it is recommended that this document is updated to ensure that it remains relevant and applicable.

Existing facilities do not necessarily comply with this standard. The expectations regarding application of this standard to new designs at existing facilities must be assessed on a case-by-case basis; however general guidelines for application are presented as follows:

- All new designs, not related to an existing facility, are expected to comply with this standard. All major upgrades to a facility, or a larger facility's process area, are expected to comply with this standard, however in some cases compromise with the configuration of the existing facility design may be required.
- All minor upgrades shall use this guide as far as practical for new equipment, however in some cases compromise may be required to accommodate the configuration of the existing facility design and installation, which will be retained after an upgrade.

1.3 Document Revisions

Wastewater Planning and Project Delivery Branch (WWPPD) will issue revisions to the document on an as required basis. WWPPD will send out an email requesting review and comments by the division list below.

All proposed revisions shall be circulated to the following divisions and branches:

- Water Services Division
- Wastewater Services Division
- Solid Waste Services Division
- Engineering Division
    - Asset Management Branch
    - Design and Construction Branch
    - Drafting and Graphic Services Branch
    - Land Drainage and Flood Protection Branch
    - Wastewater Planning and Project Delivery Branch
    - Water Planning and Project Delivery Branch

After comments are incorporated into the finalized draft, WWPPD will send a copy of the approved PDF to the Business Communications Coordinator for upload to the Water and Waste Department Website.

1.4 Definitions

A	Amperes
ATL	Across-the-Line
ATS	Automatic Transfer Switch
AWG	American Wire Gauge
BIL	Basic Impulse Level
CCTV	Closed Circuit Television
CPT	Control Power Transformer
CT	Current Transformer
CSA	Canadian Standards Association
CSO	Combined Sewer Overflow
DC	Direct Current
DCS	Distributed Control System
DOL	Direct-On-Line
EMT	Electrical Metallic Tubing
E-Stop	Emergency Stop
E&I	Electrical and Instrumentation
FAT	Factory Acceptance Test
FVNR	Full Voltage Non-Reversing (Starter)
GFCI	Ground Fault Circuit Interrupter

H_2S	Hydrogen Sulfide
HMI	Human Machine Interface
HOA	Hand – Off – Auto (switch)
hp	Horsepower
HPS	High Pressure Sodium
HVAC	Heating Ventilation and Cooling
I/O	Input / Output
IEC	International Electrotechnical Commission
IEEE	Institute of Electrical and Electronics Engineers
kcmil	Thousand Circular mil (cable size)
kVA	Kilovolt-Amperes
kVAR	Kilovolt-Amperes Reactive
kW	Kilowatt
LC	Lucent Connector (fibre)
LED	Light Emitting Diode
MCB	Moulded Case Circuit Breaker
MCC	Motor Control Centre
MCM	Thousand Circular Mil (old version – utilize kcmil for new projects)
MH	Metal Halide
MMC	Motor Management Controller
MTBF	Mean Time Between Failure
MV	Megavolt
MVA	Megavolt-Amperes
MW	Megawatt
NEMA	National Electrical Manufacturers Association
NFPA	National Fire Protection Association
NGR	Neutral Grounding Resistor
PA	Public Address
PDF	Portable Document Format
PID	Proportional Integral Derivative
PLC	Programmable Logic Controller
PFC	Power Factor Correction
PT	Potential Transformer
PVC	Polyvinyl Chloride
RMS	Root Mean Square
RTD	Resistance Temperature Device

RW90	Rubber-insulated building wire, 90°C rated
SCADA	Supervisory Control and Data Acquisition
SCCR	Short Circuit Current Rating
TDD	Total Demand Distortion
Teck90	PVC jacketed armoured cable, 90°C rated
TEFC	Totally Enclosed Fan Cooled
THD	Total Harmonic Distortion
TVSS	Transient Voltage Surge Suppressor
Unit Substation	As Defined in Section 6.13of this Design Guide
UPS	Uninterruptible Power Supply
UV	Ultraviolet
V	Volts
VA	Volt-Amperes
VAC	Volts Alternating Current
VDC	Volts Direct Current
VFD	Variable Frequency Drive
VRLA	Valve Regulated Lead Acid
WSTP	Winnipeg Sewage Treatment Program
XLPE	Cross-linked polyethylene insulation

2 GENERAL

2.1 General Design Requirements

General design requirements are as follows:

1. All designs will comply with municipal, provincial, and national codes and bylaws.
2. All electrical systems, materials, and equipment will be of a type and quality intended for use in a permanent water or wastewater facility as appropriate. Industrial-grade design requirements apply.
3. The electrical systems will provide proper protection, continuity of service and a safe working environment.
4. All electrical systems and equipment will be designed and configured with due regard for the associated specific process and nature of installation. Standard commercial-grade practices will not be adequate unless specifically permitted in this design guide.
5. Designs will incorporate the principle that change will be a constant and inevitable fact within facilities. All systems will be constructed so as to facilitate this change while minimizing the cost of change and the amount of interruption to the operation of the facility. Electrical rooms, equipment and system control panels are to have extra space and provisions for future expansion.
    - 5.1 Designs will clearly demonstrate the concept for serving the future expansion. For example: future electrical distribution equipment should be shown dotted in the extra space in electrical rooms and spare capacities allowed for in the main equipment (transformers, diesel generators, UPS, and associated switchboards and panelboards) for the future expansion should be separately identified in the equipment sizing calculations.
6. Electrical systems and equipment will be designed and installed in a coordinated fashion. The design will take advantage of current best available proven technology and provide reliable electrical systems performance for the current project and into the future.
7. Unless approved by the City, 4160 V equipment will not be located below grade. This will include but not limited to:
    - 7.1 Transformers with primary voltage 4160 V or higher
    - 7.2 Switchboards
    - 7.3 Distribution Equipment
    - 7.4 VFD’s

2.2 References

2.2.1 General

Where this document, codes, standards, and other referenced documents differ in content, the most stringent shall generally apply.

2.2.2 City of Winnipeg Standards

In addition to any other City of Winnipeg standards, the following standards shall be used:

- Water and Waste Department Identification Standard
- WSTP Automation Design Guide

2.2.3 Codes and Standards

API	American Petroleum Institute
CSA	Canadian Standards Association
NBC	National Building Code (as applicable to Manitoba)
CEC	Canadian Electrical Code (modified by Winnipeg regulations)
cUL	Underwriters Laboratories (approved for compliance with Canadian Electrical Code
ANSI	American National Standards Institute
IEC	International Electrotechnical Commission
IEEE	Institute of Electrical and Electronic Engineers
NFPA	National Fire Protection Association
ULC	Underwriters Laboratories of Canada
NEMA	National Electrical Manufacturers Association
NETA	InterNational Electrical Testing Association
IES	Illuminating Engineering Society
ICEA	Insulated Cable Engineers Association
IEC	International Electro-technical Commission
ISA	International Society of Automation
ISO	International Organization for Standardization
TIA	Telecommunications Industry Association
WSHA	The Workplace Safety and Health Act (Manitoba)

2.2.4 Design Codes and Standards

Ensure all designs shall comply with municipal, provincial, and national codes and bylaws. This includes but is not limited to:

- Canadian Electrical Code
- Manitoba Electrical Code
- Winnipeg Electrical Bylaw
- Manitoba Building Code (National Building Code of Canada with Manitoba Amendments)
- Manitoba Energy Code / National Energy Code

In addition, ensure all designs comply with the following standards:

CAN/CSA C282	Emergency Electric Power Supply for Buildings
CSA Z462	Workplace Electrical Safety (Z462)
IEEE 1584	Guide for Performing Arc–Flash Hazard Calculations (IEEE 1584)
IEEE 141	IEEE Recommended Practice for Electric Power Distribution for Industrial Plants (IEEE 141, or the Red Book)
IEEE 241	IEEE Recommended Practice for Electric Power Systems in Commercial Buildings (IEEE 241, or the Grey Book)
IEEE 242	IEEE Recommended Practice for Protection and Coordination of Industrial and Commercial Power Systems (IEEE 242, or the Buff Book)
IEEE 399	Recommended Practice for Industrial and Commercial Power System Analysis (IEEE 339, or the Brown Book)
IEEE 519	Recommended Practice and Requirements for Harmonic Control in Electric Power Systems
IEEE 551	IEEE Recommended Practice for Calculating Short–Circuit Currents in Industrial & Commercial Power Systems (IEEE 551, or the Violet Book)
IEEE 1015	Recommended Practice For Applying Low Voltage Circuit Breakers Used in Industrial and Commercial Power Systems (IEEE 1015, or the Blue Book)
IEEE 1250	IEEE Guide for Identifying and Improving Voltage Quality in Power Systems
ANSI / IEEE C37.10	IEEE Application Guide for AC High-Voltage Circuit Breakers Rated on a Symmetrical Current Basis (IEEE C37.10)
ANSI / IEEE C37.13	IEEE Standard for Low-Voltage AC Power Circuit Breakers Used in Enclosures (IEEE C37.13)

2.2.5 Units

All drawings and documentation shall use the International System of Units (SI units). Imperial units will be provided in parenthesis after the metric unit, where requested or appropriate. Exceptions are as follows:

1. Electrical conductor sizes are to be shown using units of AWG or kcmil and the wire size is not to be preceded with the number sign (#). For example: 14 AWG or 250 kcmil.

2. Arc flash energies are to be expressed in cal/cm^2

3. Motor power is to be expressed on all drawings and formal documents with both metric and imperial units. For example: 37 kW (50 hp).

2.3 Identification

All equipment shall be given an identifier that conforms to the latest version of the City of Winnipeg WWD Identification Standard. All equipment shall be identified on the drawings, documentation in the field and in software, where applicable, with the same identifier.

2.3.1 Identification Lamacoids

1. All lamacoids to be 3 mm thick plastic lamacoid nameplates, white face, black lettering.
2. Mechanically attach with self-tapping stainless steel screws. Where mechanically fastened lamacoids will compromise the enclosure rating ot the electrical equipment or are not practical adhesive such as 3M 467MP is allowable.
3. Apply lamacoids as per Table 2-1. Additional information shall be provided where required.
4. Provide warning and caution lamacoids in conformance with the latest requirements of the CEC. Lamacoids will have white lettering on a red background.

Table 2-1 : Lamacoid Requirements

Application	Text Size	Text
Electrical Equipment - General	5 mm	Line 1: Identifier
Circuit Breaker - Separate	5 mm	Line 1: Identifier Line 2: Load: Load Identifier And if Load Identifier not clear: Line 3: Load Description
Disconnect Switch - Separate	5 mm	Line 1: Identifier Line 2: Load: Load Identifier And if Load Identifier not clear: Line 3: Load Description
Fire Alarm Devices	8 mm	Line 1: Identifier
Light Switches	3 mm	Source Panel and Circuit Number
Motor Control Centre	8 mm	Line 1: Identifier Line 2: Description (Optional) Line 3: System Voltage Line 4: Fed By
Motor Starter or MCC Bucket	5 mm	Line 1: Load Identifier Line 2: Load Description And where applicable: Line 3: One of # sources of electrical power (where more than one source of power feeds the equipment)
Panelboards	8 mm 5mm may be used for space limitations	Line 1: Identifier Line 2: Description (Optional) Line 3: System Voltage Line 4: Fed By
Protection Relays	5 mm	Line 1: Identifier Line 2: Description
Receptacles	3 mm	Source Panel and Circuit Number
Switchgear	8 mm	Line 1: Identifier Line 2: Description (Optional) Line 3: System Voltage Line 4: Fed By
Switchgear Breaker or Switch	8 mm	Line 1: Load Identifier Line 2: Load Description
Transformer – Indoor	8 mm	Line 1: Identifier Line 2: Rating, System Voltage Line 3: Fed By
Transformer - Outdoor	10 mm	Line 1: Identifier Line 2: Rating, System Voltage Line 3: Fed By

This page is intentionally blank.

3 DESIGN REQUIREMENTS

3.1 Service Conditions

1. Minimum requirements for service conditions applicable to all outdoor electrical installations are as follows:
   - 1.1 Minimum Temperature: -40°C
   - 1.2 Maximum Temperature: 40°C

3.2 Voltage Levels

3.2.1 System Voltage Levels

The acceptable system voltage levels to be utilized are shown in Table 3-1. See Section 7.2 regarding the relationship of motor voltage levels to system voltage levels. Note that the supply voltage level may be dependent upon the utility.

Selection of a higher voltage over a lower voltage shall be utilized where:

1. The required current levels at the lower voltage are high (> 2000 A);
2. The utility is unable to supply the required power at the lower voltage; or
3. The potential arc flash energies at the lower voltage are at dangerous levels (> 40 cal/cm2).

3.3 System Configuration Concepts

The electrical system configuration for a facility is typically selected in the early planning stages for design. This section presents various system configuration concepts to guide the designer in typical configurations that may be applicable to the project at hand. Note that a facility could potentially use multiple concepts from the proposed configurations. For larger facilities, it is expected that the overall system configuration will be complex, and will not necessarily be categorized in the indicated configurations.

Notes:

1. The system distribution must always be designed by a professional engineer registered in the Province of Manitoba. The indicated system configurations are typical and are not necessarily appropriate for all installations. Detailed review of the specific constraints and risks associated with the particular application must be performed to identify potential modifications or additions required to the proposed system configurations.
2. The term “standby generator” is utilized in this section to represent a generator that is not rated for continuous duty. If the generator is utilized to power life-safety systems, it must be designated as an emergency generator, as discussed in Section 11.

Table 3-1 : Acceptable System Voltage Levels

Line-to-Line Voltage Level	Application	Notes
66 kV	Supply	Receive bulk power from the utility at large facilities
	Distribution	Not recommended to be typical.
	Utilization	Not applicable.
12.47 kV	Supply	Receive bulk power from the utility at medium to large sized facilities.
	Distribution	Preferred voltage for distribution at new large facilities, with cumulative distribution capacity > 7.5 MVA.
	Utilization	Motor loads > 1500 kW (2000 hp). Not expected to be typical.
4.16 kV	Supply	Receive bulk power from the utility at medium sized facilities.
	Distribution	For in-plant distribution at a medium to large sized facility, with cumulative distribution capacity in the approximate range of 1.5 to 7.5 MVA
	Utilization	For powering motor loads 260 kW – 1500 kW (350 hp to 2000 hp)
600 V	Supply	Preferred supply voltage for small to medium sized facilities up to 2000 kVA.
	Distribution	For in-plant distribution over short distances, up to 2 MVA.
	Utilization	Preferred voltage for motors 0.37 kW (0.5 hp) to 260 kW (350 hp).
480 V	Supply	Not recommended.
	Distribution	Not recommended.
	Utilization	Where required to feed specific equipment only available with a 480 V utilization voltage.
208/120 V	Supply	Acceptable supply voltage for small facilities (< 50 kVA load)
	Distribution	Not recommended.
	Utilization	Fractional horsepower motors, lighting, and other small misc. plant loads. Preferred over 120/240 V 1Ø systems in facilities with 3Ø distribution systems.
120/240 V 1Ø	Supply	Acceptable supply voltage for small facilities (< 30 kVA load)
	Distribution	Not recommended.
	Utilization	Fractional hp motors, lighting, and other small misc. plant loads.

Note:

1. There will be exceptions to the above table. Exceptions are to be reviewed and approved on a case-by-case basis.

3.3.1 Configuration A - 208/120 V

Configuration A, which is a simple system with 208/120 V supply from the utility, is only applicable to the smallest of facilities. It would typically only be utilized for small buildings without any significant loads. A single phase 120/240 V service could also be considered where no significant motor loads are present. A single line diagram is shown in Figure 3-1.

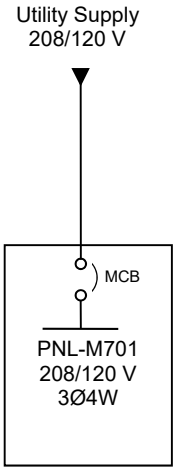

Figure 3-1: Configuration A - 208/120 V

3.3.2 Configuration B – 600 V Distribution

Configuration B, which is a simple radial system with a 600 V supply from the utility, is applicable to the facilities with lower reliability requirements. A sample single line diagram is shown in Figure 3-2.

Internal distribution within the facility, if any, is at 600 V. While not shown on the sample drawing, additional 600 V panels or MCCs fed from the main distribution could be included with this configuration.

No redundancy, or standby generation, is provided by this configuration. While any power failure or equipment failure will result in an outage, operation is simple.

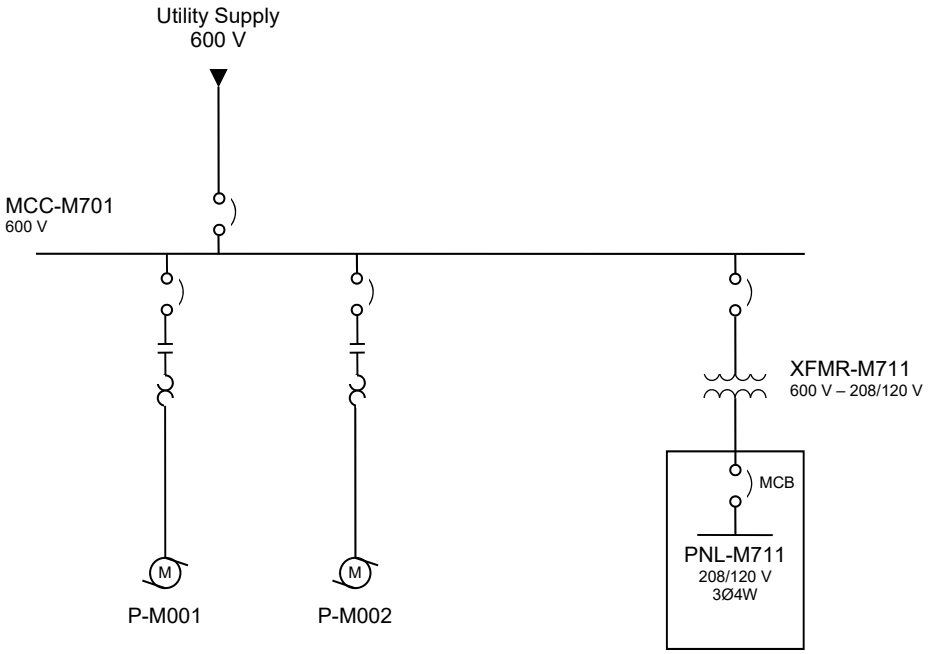

Figure 3-2: Configuration B - 600 V Distribution

3.3.3 Configuration C - 600 V Distribution with Portable Generator Provision

Configuration C is similar to Configuration B, except that a provision for a temporary standby generator is provided for the whole facility. This would typically only be applicable for facilities with less than 400 A of essential 600 V load, and delay in provision of the standby power is acceptable. It should also be noted that confirmation of the City's current available portable generator ratings should be undertaken. A sample single line diagram is shown in Figure 3-3.

This configuration may be considered when short term (< 3 hours) power failures are determined to be acceptable, but longer power failures are not.

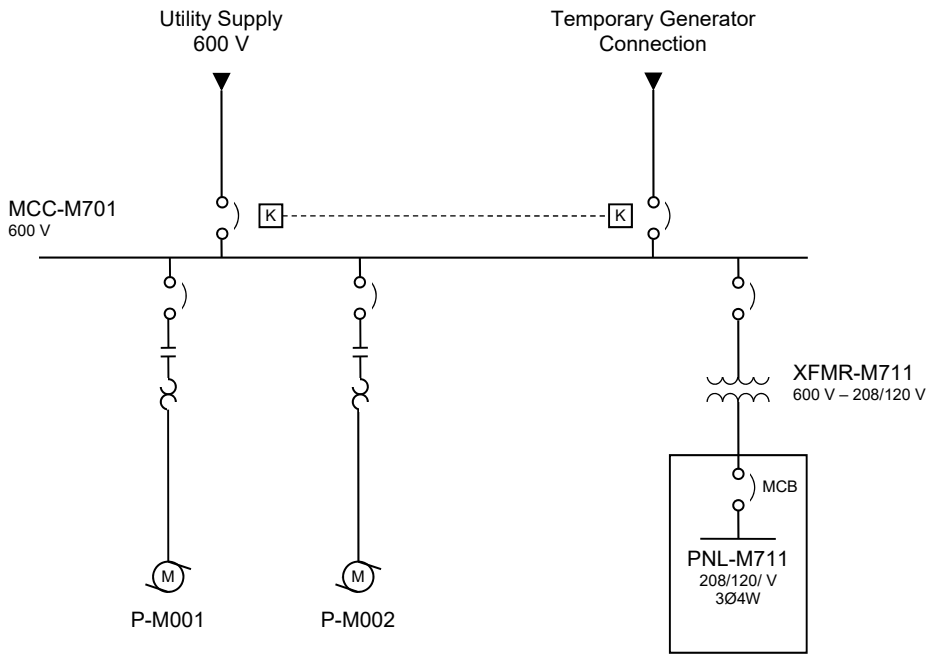

Figure 3-3: Configuration C - 600 V Distribution with Portable Generator Provision

Note:

1. If the maximum demand load is larger than the capacity of the temporary generator, it may be discussed with the City whether manual load shedding may be utilized to allow for partial operation under temporary generator power.

3.3.4 Configuration D - 600 V Distribution with Standby Generator

Configuration D is similar to Configuration C, except that a standby generator is provided to increase availability in the event of a utility power failure. In this configuration, the standby generator is sized to provide power for the entire facility load. A sample single line diagram is shown in Figure 3-4.

This configuration should be considered when:

Power failures are not acceptable;
The plant can be taken offline for maintenance, with proper planning; and
Rare events of equipment failure that cause a total plant outage are an acceptable risk.

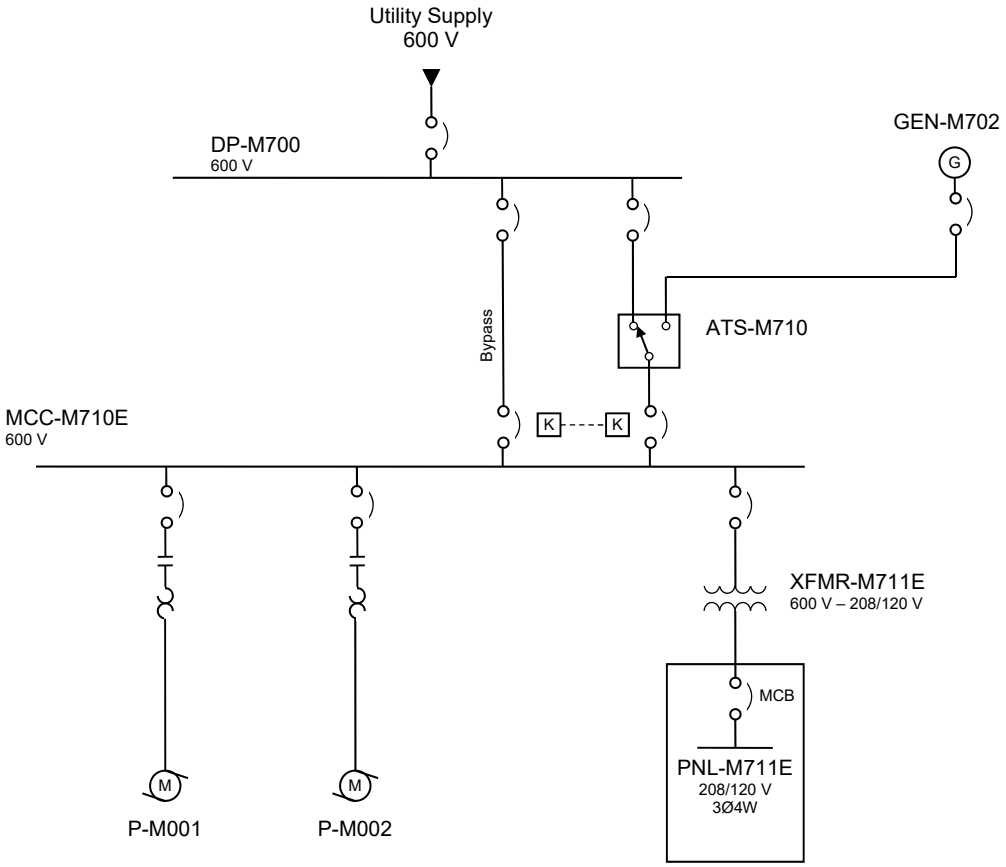

Figure 3-4: Configuration D - 600 V Distribution with Standby Generator

Note:

1. The above system configuration includes a bypass around the transfer switch to allow for servicing. The bypass may be optional in less critical installations.

3.3.5 Configuration E - 600 V Distribution with Essential Bus

Configuration E, 600 V Distribution with Essential Bus, is the same as Configuration D, 600 V Distribution with Standby Generator, except that the loads are split between essential and non-essential loads. The standby generator only services critical loads, allowing the standby generator rating to be reduced. This configuration would be appropriate when a significant portion of the total load is non-essential. See Figure 3-5 for an example simplified single line diagram.

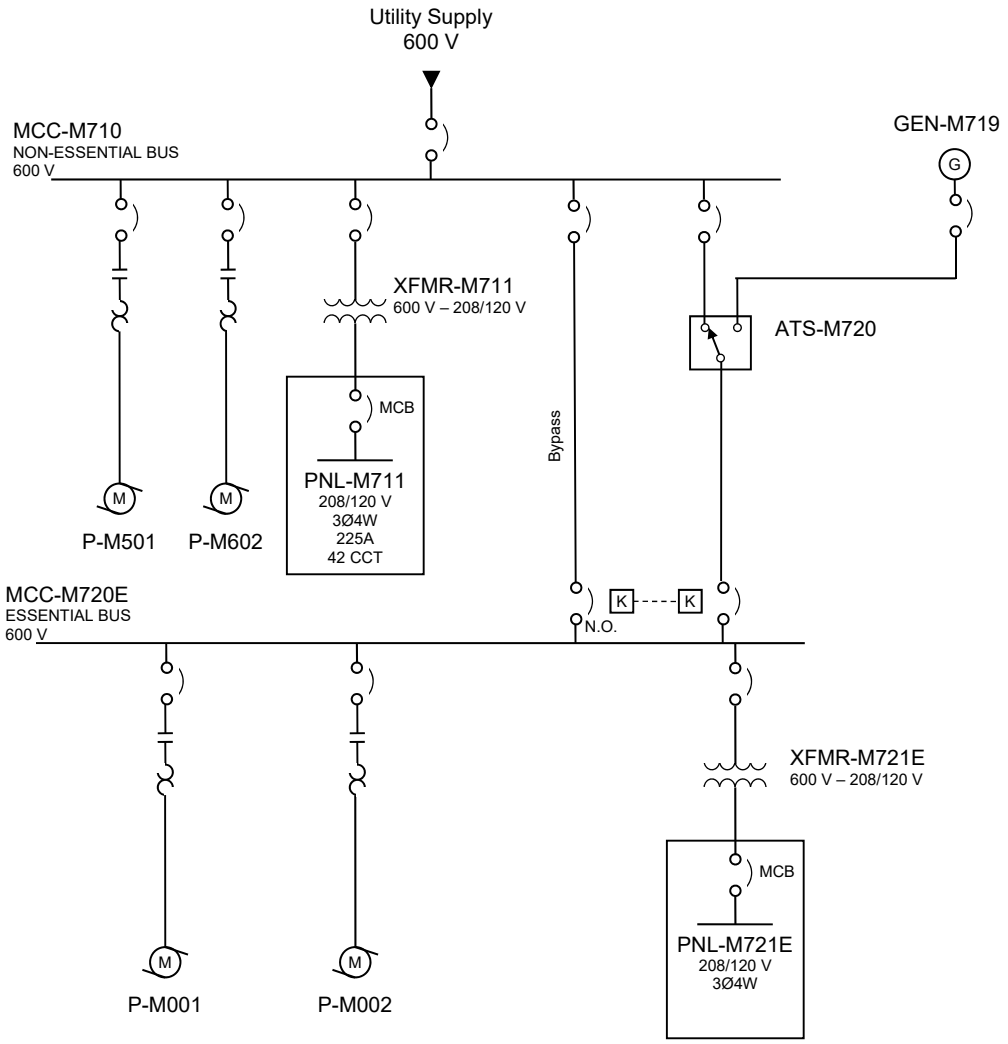

Figure 3-5: Configuration E - 600 V Distribution with Essential Bus

Note:

1. The above system configuration includes a bypass around the transfer switch to allow for servicing. The bypass may be integral to the transfer switch in less critical installations.

3.3.6 Configuration F - 600 V Redundant with Standby Generation

Configuration F provides redundancy for the electrical distribution system. In addition, a standby generator is provided to address power failure of one or both of the electrical services. A sample single line diagram is shown in Figure 3-6. This configuration should be considered when the size and criticality of the facility warrants redundancy, and power failures are not acceptable. Some variations of the shown single line diagram are possible where full standby generation for the entire facility is not deemed to be required.

It is typically required that each service is sized to accommodate the total facility load from a single service. If load shedding is required to operate with a single service active, this should be clearly indicated on the drawings and approved by the City.

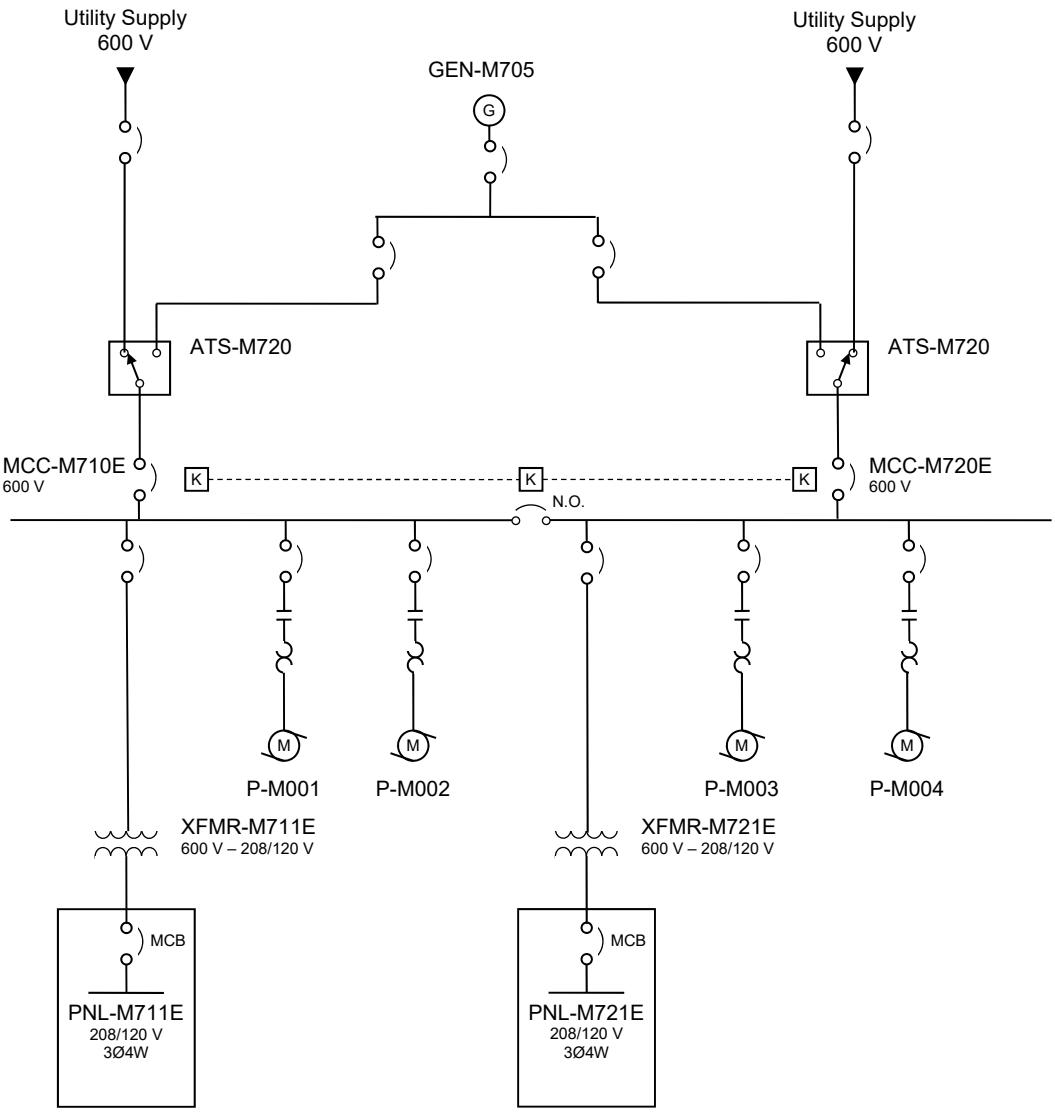

Figure 3-6: Configuration F - 600 V Redundant with Standby Generator

3.3.7 Configuration G - MV Distribution

Configuration G is a radial system with a medium voltage supply from the utility. Typically, transformation and utilization at 600 V and 208/120 V would also be provided. A sample single line diagram is shown in Figure 3-7.

Internal distribution within the facility is typically at medium voltage, and the system may or may not have motors or other loads fed directly via medium voltage. No redundancy, or standby generation, is provided by this configuration. While any utility power failure or equipment failure will result in an outage, operation is simple and the capital cost is relatively low. Figure 3-7 shows a utility owned transformer configuration, however a City owned supply transformer is also a potential configuration. With a City owned transformer configuration, a customer owned disconnect is required on the primary side of the transformer.

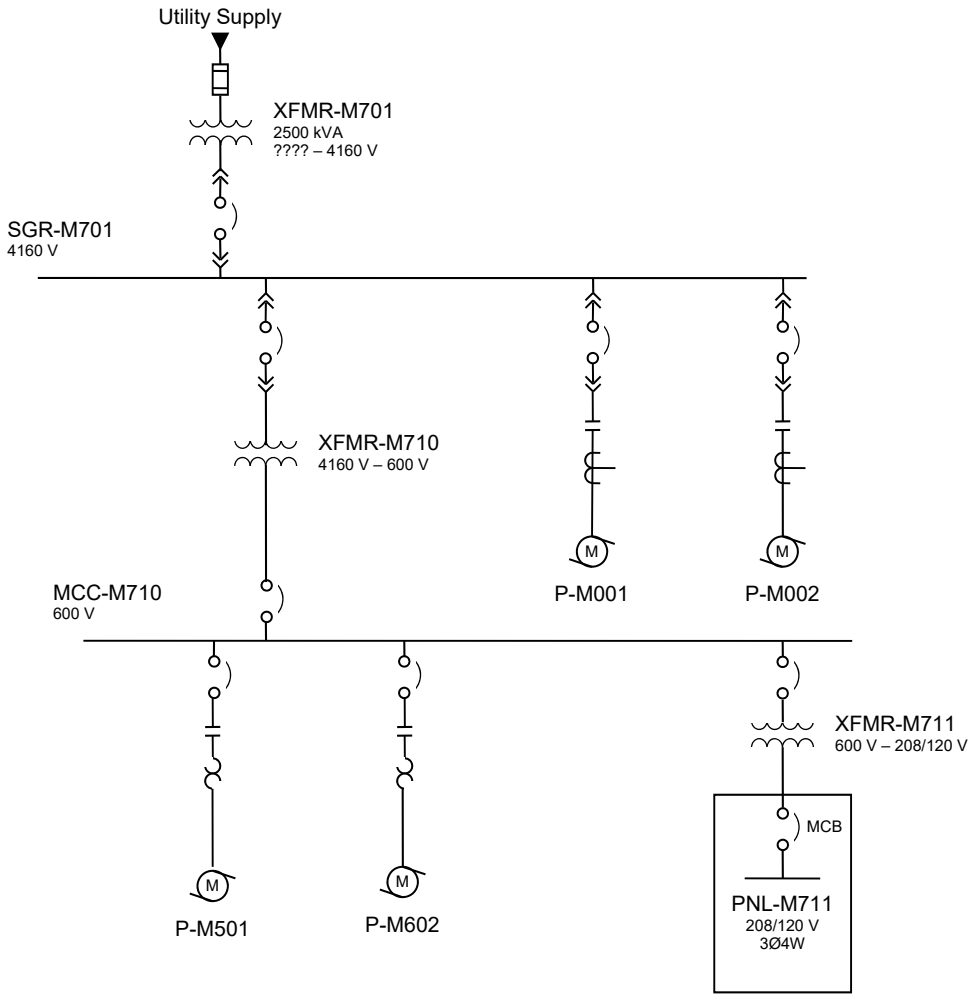

Figure 3-7: Configuration G - MV Distribution

3.3.8 Configuration H - MV Distribution with Essential Bus

Configuration H, MV Distribution with Essential Bus, is similar to Configuration E, 600 V Distribution with Essential Bus, except that medium voltage distribution is utilized in addition to 600 V distribution. The standby generator only services critical loads, allowing the standby generator rating to be less than the total facility load. This configuration would typically be considered when the service size exceeds 2 MVA or medium voltage motors are utilized. See Figure 3-8 for an example simplified single line diagram. Note that a utility owned transformer configuration is shown, however a City owned supply transformer is also a potential configuration. With a City-owned transformer configuration, a City-owned disconnect is required on the primary side of the transformer.

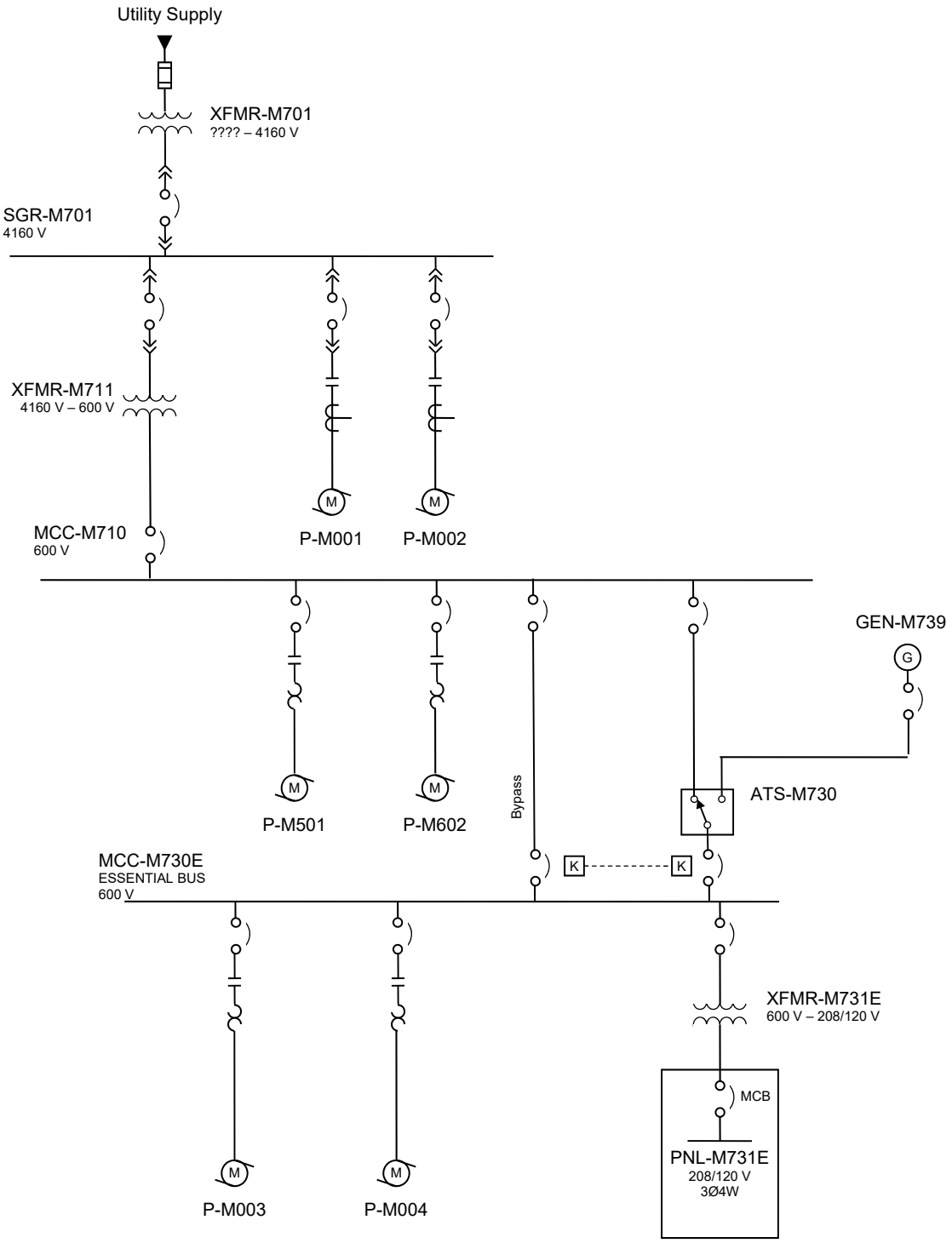

Figure 3-8: Configuration H - MV Distribution with Essential Bus

3.3.9 Configuration I - MV Redundant with Essential Bus

Configuration I, MV Redundant with Essential Bus, utilizes medium voltage for distribution and large motor loads. Most of the load is not protected by standby generation, but tie breakers are provided to allow for operation with a single feeder out of service. The services are typically rated such that the entire facility can be fed from a single service. This configuration would typically be considered when the service size exceeds 2 MVA or medium voltage motors are utilized. See Figure 3-9 for an example simplified single line diagram. Note that utility owned transformer configurations are shown; however City-owned supply transformers are also a potential configuration. With a City-owned transformer configuration, a City-owned disconnect is required on the primary side of each transformer.

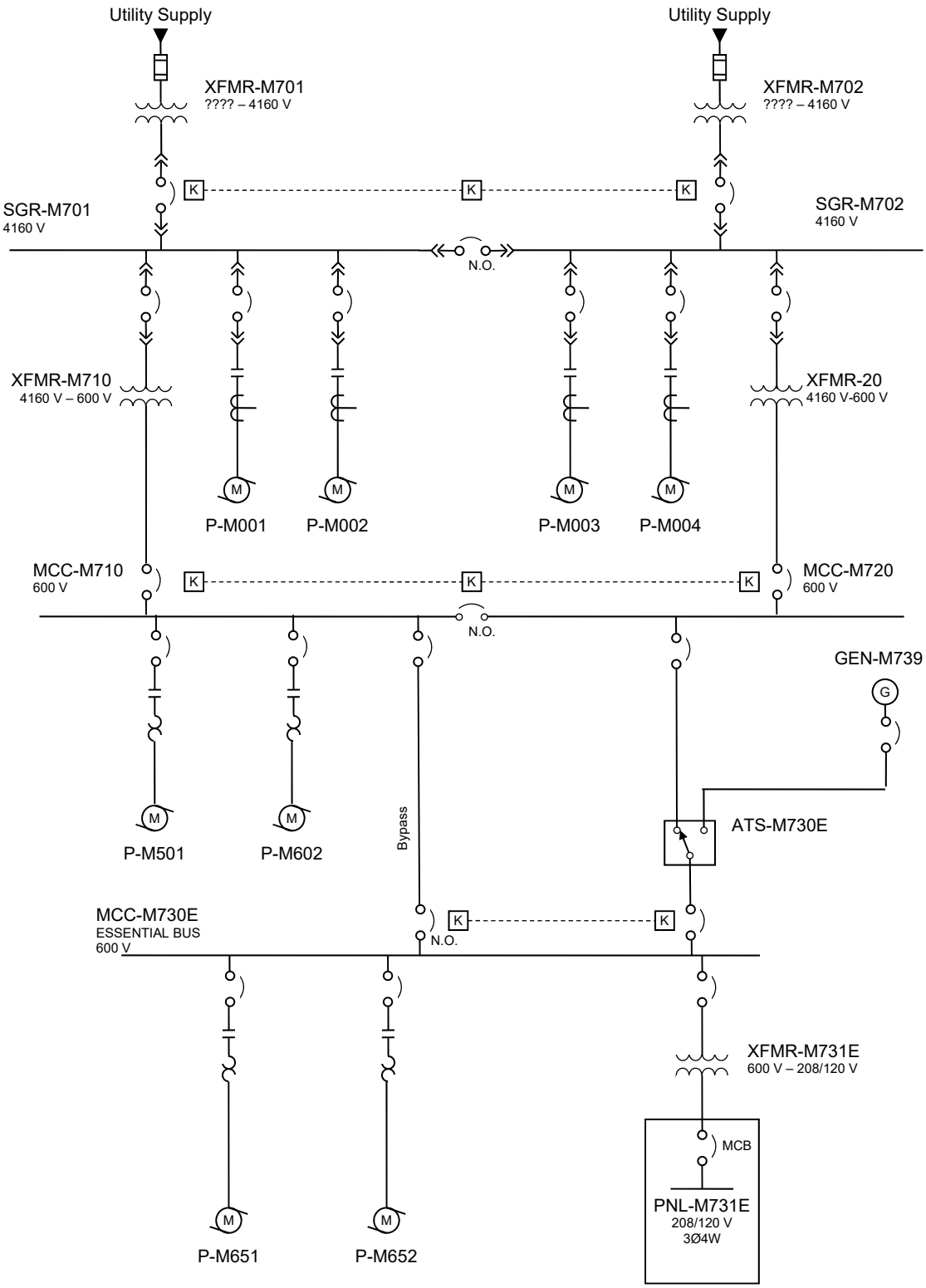

Figure 3-9: Configuration I - MV Redundant with Essential Bus

3.3.10 Configuration J - MV Redundant with Integrated Generation

Configuration J, MV Distribution with Integrated Generation, utilizes medium voltage for distribution and potentially motor loads. Generation is provided, with generator switchgear to allow for paralleling of generators and with synchronizing switchgear, to allow for seamless transitions between utility and generator power for testing purposes. Load shedding would be an option under this configuration as well. This configuration would typically be considered when the service size exceeds 2 MVA or medium voltage motors are utilized, and a high level of availability is required. See Figure 3-10 for an example simplified single line diagram.

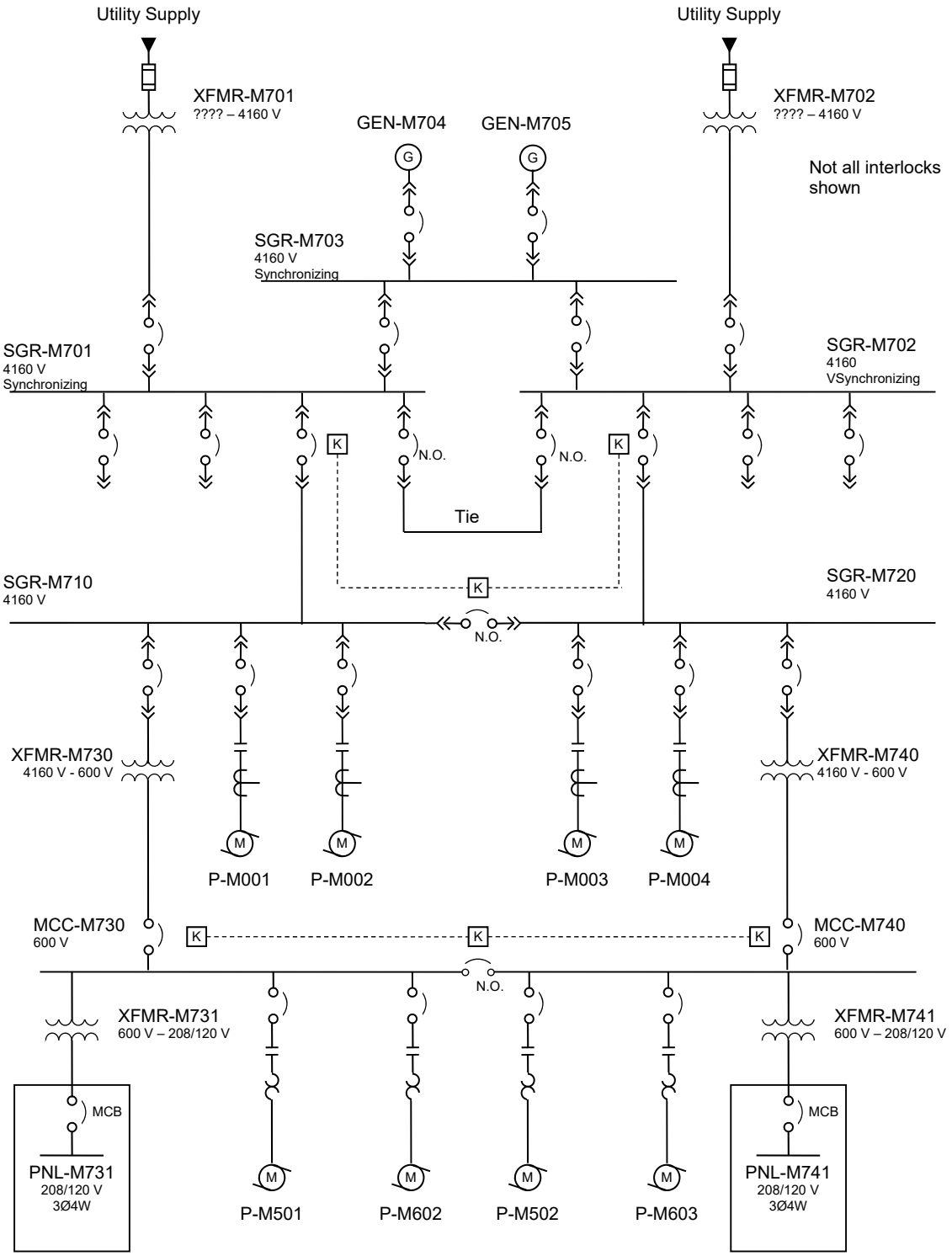

Figure 3-10: Configuration J - MV Redundant with Integrated Generation

3.3.11 System Configuration Selection

The selection of the appropriate system configuration for each application is an engineering decision that must be made, with consideration to the specific requirements of the application. The preferred system configurations, shown in Table 3-2, are deemed to be general guidance regarding system configurations that are generally acceptable to the City. However, in some cases, the application requirements or reliability requirements are not necessarily clear and detailed discussion with the City is required. Where selection of an appropriate system configuration is not clear, a reliability analysis shall be performed to aid in system selection.

Table 3-2 : Preferred System Configurations

Application	Risk	Preferred Configurations
Land Drainage Pumping Station	Low	(B) 600 V Distribution
	Medium	(C) 600 V Distribution with Portable Generator Provision
	High (4)	(D) 600 V Distribution with Standby Generator
Wastewater Flood Pumping Station	Low	(B) 600 V Distribution
	Medium (5)	(B) 600 V Distribution (C) 600 V Distribution with Portable Generator Provision
	High	(D) 600 V Distribution with Standby Generator
Wastewater Lift Station - Small	Low	(A) 208/120 V (*) (C) 600 V Distribution with Portable Generator Provision
	Medium	(D) 600 V Distribution with Standby Generator (E) 600 V Distribution with Essential Bus
	High	(D) 600 V Distribution with Standby Generator (E) 600 V Distribution with Essential Bus (F) 600 V Redundant with Standby Generation
Wastewater Lift Station – Large (6)	Low	(D) 600 V Distribution with Standby Generator (E) 600 V Distribution with Essential Bus (H) MV Distribution with Essential Bus
	Medium	(E) 600 V Distribution with Essential Bus (*) (F) 600 V Redundant with Standby Generation (I) MV Redundant with Essential Bus
	High	(F) 600 V Redundant with Standby Generation (I) MV Redundant with Essential Bus
Wastewater Treatment Facility	-	(F) 600 V Redundant with Standby Generation (*) (I) MV Redundant with Essential Bus (J) MV Redundant with Integrated Generation
Regional Water Pumping Station	-	(I) MV Redundant with Essential Bus (J) MV Redundant with Integrated Generation

See Notes next page.

Notes:

1. The existing City facilities do not necessarily conform to the preferred system configurations.
2. It is recommended that the City provide further definition of the risk classification.
3. Configurations marked with a (*) require specific City acceptance.
4. An underpass pumping station on a major route is considered a high risk installation.
5. Currently, most/all flood pumping stations in the City are not provided with standby power. It is recommended to prioritize provision of standby power to lift stations over flood stations in combined sewer areas.
6. A large lift station is deemed to be one with more than 200 kVA of demand load. This size is based upon the capacity of the portable generator that the City intends to purchase.
7. The use of engine based backup drives could, with approval of the City, affect the requirement for standby generation or redundancy in a Land Draining Pumping Station or Wastewater Lift Station.

3.4 Redundancy Requirements

3.4.1 Wastewater Treatment Facilities

1. All electrical systems in a wastewater treatment facility shall be configured in a redundant manner such that the failure of a single piece of major equipment or major conductor will not impair the operation of the wastewater treatment facility. Without reducing the general requirement specified above, specific redundancy requirements are itemized in Table 3-3.

Table 3-3 : Wastewater Treatment Process Redundancy Requirements

Process	Capacity	Redundant Mandatory	Notes
Incoming Electrical Service	All	Yes	
Raw Sewage Pumping Station	All	Yes	
Preliminary Treatment	All	Yes	
Primary Treatment	All	Yes	
Wet Weather Treatment	>= 100 MLD	Yes	
	< 100 MLD	No	
Secondary Treatment	Yes	Yes	
Tertiary Treatment	Yes	Yes	
Effluent Disinfection	>= 100 MLD	Yes	
	< 100 MLD	No	
Effluent Sampling	All	No	
Sludge/Biosolids	All	Yes	
Hauled Liquid Waste	All	No	

2. The feeders to each redundantly configured piece of equipment shall be arranged in a manner to not defeat the redundancy of the arrangement.
3. Two-bank redundancy shall be utilized for medium voltage equipment.
4. Two-bank redundancy shall be utilized for low-voltage (< 750 V) equipment, except redundancy utilizing multiple banks will be permitted where the design capacity exceeds typical equipment ratings or the resulting arc flash energy of a two bank scenario is greater than desired/specified.
5. The capacity of two-bank and multi-bank redundancy schemes shall be such that the minimum capacity of each bank is the sum of any two bank loads that can be tied together, or 2xC/N, (where C is the Total Design Capacity (including spare) and N is the number of banks), whichever is greater. For clarity, with a two-bank scenario, if the total design capacity of a building is 1 MVA, then each redundant bank must have a capacity of 1 MVA.
6. Where multiple electrical rooms are utilized for a given process, given the distributed nature of the process, each electrical room shall be fed by a minimum of two banks of power complete with the appropriate interlocks (kirk key or similar), unless the electrical room has less than 100 kVA of load and there would be no consequences to the facility operation in the event of the electrical bank being out of service. An example of an electrical distribution for a distributed process is shown in Figure 3-11.

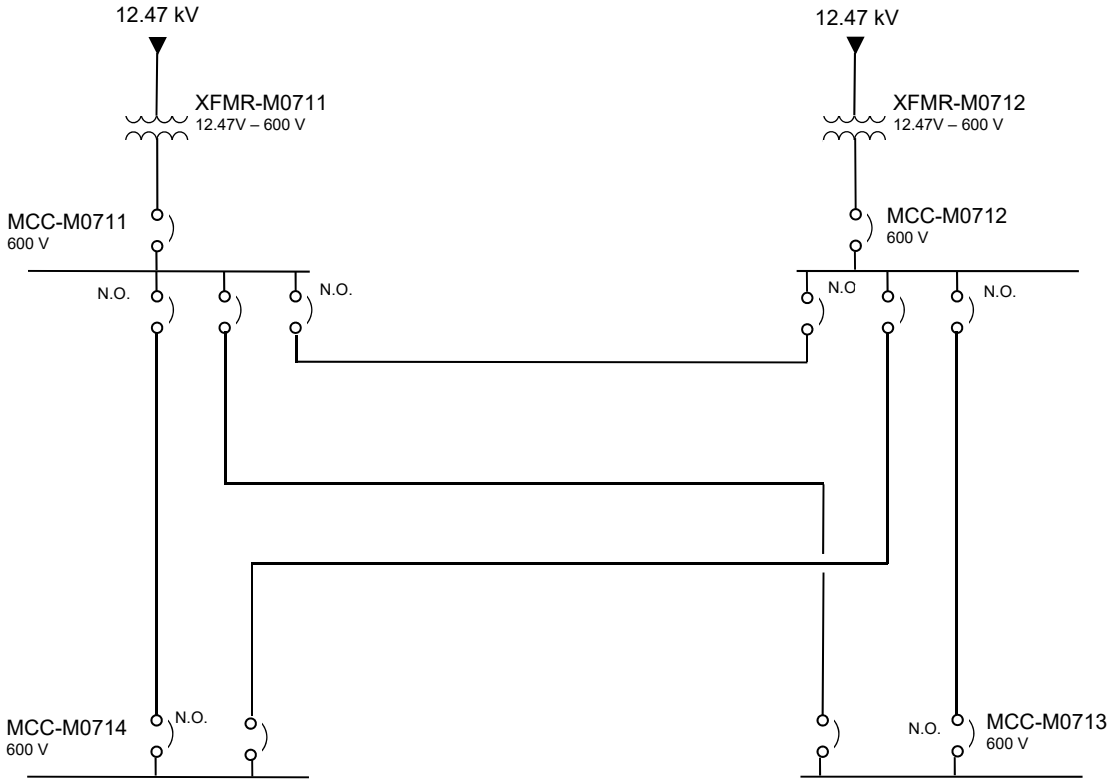

Figure 3-11: Example of Distributed Process Redundancy

3.5 Electrical Service

Electrical service sizing for new applications should be as shown in Table 3-4. Review potential future loads with the City and ensure that they are accommodated in the design. Deviations in the sizing of the electrical service are to be approved by the City.

Table 3-4 : Minimum Electrical Service Sizing

Application	Redundant Service	Minimum Size
Land Drainage Pumping Station	No	Design load + 25% spare
Wastewater Flood Pumping Station	No	Design load + 25% spare
Wastewater Lift Station	No	Design load + 25% spare
	Yes	Total design load + 15% spare on each service (See Note 1)
Wastewater Treatment Facility	Yes	Total design load + 25% spare on each service
Regional Water Pumping Station	No	Design load + 25% spare
	Yes	Total design load + 10% spare on each service (See Note 2)

Notes:

1. Each of the redundant services would be sized to carry the full design load of the facility + 15%. Thus, under normal operation with two services, the total loading of the total capacity should not exceed 42.5%.
2. Each of the redundant services would be sized to carry the full design load of the facility + 10%. Thus, under normal operation with two services, the total loading of the total capacity should not exceed 45%.

Coordinate the service details including voltage, size and point of delivery with the supply utility (Manitoba Hydro). Provide the utility with data indicating connected load, demand load, the associated load factors and a list of large motors (greater than 150 hp) that are included in the total load requirements for the plant.

Where technically and economically feasible (based on the total lifecycle costs), it is the City's preference to locate the point of delivery downstream of high and medium voltage transformation.

The design of the configuration and location for the service should consider the following factors:

- Location of the principal loads on the site;
- Redundancy requirements;
- Management of electrical system parameters including short circuit levels and associated coordination, arc flash levels, harmonics and power factor;
- Essential power requirements; and
- Future growth.

3.6 Classification of Loads

3.6.1 Wastewater Treatment Facilities

Priority	Description	Examples	Standby Power
1 – Emergency	Life safety systems mandated by codes and regulations. (See Note 1)	Fire alarm and emergency voice communications systems; Firefighters' elevators and elevators serving storeys above the first storey in a high building; Fire protection water supply pumps that depend on electrical power supplied to the building; Smoke control systems; Fans required for smoke control; Emergency lighting; and Exit signs.	Yes
2 – Critical	Loads that are critical for health and safety of facility occupants	Ventilation systems for electrically classified areas, hazardous gas detection systems	Yes
3 – Essential	Essential loads required for process operation or infrastructure protection that cannot be interrupted.	Sump pumps, Raw sewage pumps	Yes
4 – Essential Intermittent	Essential loads required for process operation, but may be interrupted for intervals during significant power events.	BNR aeration blowers	Yes
5 – Normal A	Loads required for process operation that should not normally be interrupted, but may be under power failures and other extreme events.	BNR mixers	Not required
6 - Normal B	Process loads that may be interrupted for significant abnormal events	Secondary clarifier mechanisms	Not required
7 – Non-Essential A	Loads that may be interrupted with no significant impact on process, but may inconvenience personnel	General lighting, lunch room microwaves, general ventilation in non-hazardous areas.	Not required
8 – Non-Essential B	Loads that may be interrupted with only minor inconvenience to	Task lighting, convenience receptacles	Not required

	personnel		

Notes:

1. The use of batteries in a life safety load does not change the load priority of the source. For example, a fire alarm system is a critical load.

2: From a load shedding perspective, additional levels are for adjustment of set-points and operating conditions prior to dropping a load.

3.7 Distribution Capacity

1. The size and capacity for new electrical distribution equipment and interconnections shall be as shown in Table 3-45. Review potential future loads with the City and ensure that they are accommodated in the design. Deviations in the sizing of the electrical distribution are to be reviewed and accepted by the City in writing.

2. Distribution systems may be considered dedicated (Dedicated Distribution Equipment) where:

   2.1 UNDER DEVELOPEMENT

Reference Transformer Section 6.11 in this Design Guide for additional information.

Table 3-5 : Minimum Electrical Distribution Sizing

Application	**Application**	**Current Design Load**	**Future Design Load** (See Note a)	**Spare Capacity**
Medium Voltage	General	Required	Required	25%
	Dedicated (See Note b)		No (See Note c)	10%
600 V Switchgear	General		Yes	Total design load + 25% spare on each service
600 V MCCs	General		Yes	Total design load + 25% spare on each service
	Dedicated (See Note b)			
Low Voltage Process Panelboards			No	Design load + 25% spare
			Yes	Total design load + 10% spare on each service (See Note b)
Low Voltage Building Panelboards				

Notes:

1. The Future Design Load is the planned future load that is anticipated to be planned for within the scope of the project. This typically includes planned future upgrades.
2. Despite the fact that Dedicated Distribution Equipment does not require future spare capacity, the building space, including electrical rooms, shall provide space as required to install future general and Dedicated Distribution Equipment.
   a) Each of the redundant services would be sized to carry the full design load of the facility + 15%. Thus, under normal operation with two services, the total loading of the total capacity should not exceed 42.5%.
   b) Each of the redundant services would be sized to carry the full design load of the facility + 10%. Thus, under normal operation with two services, the total loading of the total capacity should not exceed 45%.

3 Coordinate the service details including voltage, size and point of delivery with the supply utility (Manitoba Hydro). Provide the utility with data indicating connected load, demand load, the associated load factors and a list of large motors (greater than 150 hp) that are included in the total load requirements for the plant.

4 Where technically and economically feasible (the total lifecycle costs are not significantly higher), it is the City's preference to locate the point of delivery downstream of high and medium voltage transformation.

3.8 System Grounding

Historically, most systems within the City of Winnipeg have been solidly grounded. However, the use of neutral grounding resistors has significant benefits in certain applications. Some typical benefits of a neutral grounding resistor are:

- Minimizes the risk of arc flash and arc blast on the first ground fault;
- Reduces electric-shock hazards to personnel caused by stray ground-fault currents in the ground return path;
- Reduces the arc blast or flash hazard of a line-to ground arc fault;
- Reduces burning and melting effects in faulted electrical equipment, such as switchgear, transformers, cables, and motors;
- Limits energy available to a ground fault;
- To reduce the momentary line-voltage dip occasioned by the occurrence and clearing of a ground fault; and
- Can improve availability by allowing equipment to continue to operate during a single line-to-ground fault, provided a continuously rated neutral grounding resistor is provided.

Some disadvantages of neutral grounding resistors are:

- Transformer neutral bushings must be rated for the full secondary voltage;
- Transformer secondary windings must be fully insulated for the full secondary voltage at the neutral end;
- System neutral is no longer at zero volts during a fault;
- Additional costs and complexities; and
- Additional monitoring, protection and coordination requirements.

System Applications:

1. 208/120 V Systems

   1.1 Solid grounding is mandatory.

2. 600 V (and 480 V if applicable) Systems:
   - 2.1 Systems < 1000 kVA would typically be solidly grounded, however high-resistance grounding (HRG) should be utilized for cases where continuity of service is required in the event of a ground fault or reduction of the potential arc flash risk in the event of an L-G fault is desired.
   - 2.2 Systems >= 1000 kVA shall be provided with high-resistance grounding unless otherwise approved by the City.
3. 4160 V Systems
   - 3.1 High-resistance or low-resistance grounding is mandatory, except where:
     - a) The power supply from the utility is a 4160 V solidly grounded system; or
     - b) Express written permission is received from the City.
4. Medium Voltage Systems > 4160 V
   - 4.1 Low resistance grounding is mandatory for all medium voltage systems > 4160 V on the secondary of a City-owned transformer.
   - 4.2 Solid grounding is acceptable where no motor loads are utilized at the voltage and the power directly comes from the utility without City-owned transformation. That is, it is acceptable to distribute medium voltage power around a site, provided the power supply is from the utility at that voltage. However, specific engineering review is required to justify the proposed installation.

3.9 Short Circuit Current Rating

Short Circuit Current Rating (SCCR) is the maximum prospective symmetrical fault current that a device, panel or a system can safely withstand for a short specified time. The SCCR is usually expressed in kA at a specified voltage, and in some cases may be linked to specific upstream overcurrent protection devices, which will clear a fault within a specified time. The SCCR is also sometimes known as fault current *withstand rating.*

The SCCR is also closely related to the *interrupting rating* for protective circuit devices. The interrupting rating is the highest current at a specific voltage that the device can interrupt.

The SCCR rating shall exceed the available fault current of the system, at the point of application of the device, panel or system and shall allow for future expansion of the system including replacement of transformers. For example, if a bus has a 23 kA SCCR requirements based upon an upstream 5.75% impedance transformer, but it is reasonably possible that the impedance of a replacement transformer could be 5%, size the SCCR of the bus based upon calculations using the 5% impedance. At a minimum the SCCR will be sized based on a +10% margin.

A short circuit current study shall be completed to determine the fault currents for the equipment being designed with the results being used to determine the appropriate SCCR for the equipment.

Refer to the minimum transformer impedance values outlined in the City of Winnipeg Electrical Bylaw when determining the fault current available from utility supply transformers. All systems with a service voltage of 600 V or less shall assume an infinite bus on the primary of the utility transformers in SCCR calculations. Note that the actual utility fault currents must always be obtained for performance of the coordination and arc flash studies.

Maximum assumed SCCR values for unmarked components (i.e. with no SCCR rating) that may be assumed for calculations are as follows:

Table 3-6 : Maximum Assumed Short Circuit Current Rating (SCCR) for Unmarked Components

System/ Component	SCCR [kA]
Bus-bars	10
Circuit Breaker (including GFCI)	5
Current shunt	10
Fuse Holder	10
Industrial Control Equipment:	
Auxiliary devices (overloads)	5
Switches	5
Motor Controllers	
0 - 37.3 kW (0 - 50 hp)	5
38 - 149.2 kW (51 - 200 hp)	10
149.9 kW - 298.4 kW (201 - 400 hp)	18
299.1 kW - 447.6 kW (401 - 600 hp)	30
448.3 - 671.4 kW (601 - 900 hp)	42
672.1 - 1118 kW (901 - 1500 hp)	85
Meter Socket Base	10
Miniature fuse (maximum use at 1250 V)	10
Receptacle (GFCI type)	2
Receptacle other	10
Supplementary protector	0.2
Switch Unit	5
Terminal Block	10

3.10 Harmonics

1. The electrical design should ensure that harmonics are within IEEE 519 requirements at all major points in the electrical distribution, and not just at the utility service. Major points shall include but not be limited to:
   - 1.1 The main switchgear or electrical distribution in a building or process area of that voltage; and
   - 1.2 Switchgear / electrical distribution equipment rated greater than 3 MVA.
2. Voltage harmonics shall be limited as follows at all panelboards, MCCs, switchboards, switchgear, and other electrical busses:
   - 2.1 Individual frequency harmonics < 3%; and
   - 2.2 Total Harmonic Distortion (THD) < 5% as defied by IEC 61000-4-7.
3. Ensure current harmonics at major points in the electrical distribution are within IEEE 519 Table 10-3.
4. Harmonic studies are required for facilities with significant harmonic sources, as discussed in Section 19.4.
5. Refer to Section 15 regarding additional power quality requirements.
6. Comply with the latest version of the Manitoba Hydro's Power Quality Specification.

3.11 Environmental

Design / specify all electrical equipment, enclosures, etc. located outdoors for ambient temperatures of +/- 40^0C. Ensure additional prevailing conditions, including humidity, accumulation and infiltration of snow and any environmental contaminants or conditions that could affect equipment performance and longevity are addressed in the design.

Electrical equipment below 1,000 volts shall conform to the NEMA classifications detailed below. For electrical equipment above 1,000 volts, the enclosure ratings shall be utilized as a guideline to achieve the ratings described. Enclosure utilization will generally conform to the following guidelines:

Indoor, clean areas (electrical rooms, etc.) – NEMA 1.
Plant process areas that are neither hazardous nor corrosive – NEMA 12 or NEMA 4 (based on sound engineering judgement).
Outdoors – NEMA 4.

Plant process areas that are corrosive (typical wastewater environment containing hydrogen sulfide) – NEMA 4X minimum. Other corrosion resistant materials may be required depending upon the nature of the chemicals present.

Hazardous rated plant process areas require appropriate enclosures. This may require NEMA 7 enclosures, however alternate enclosure types are also appropriate for certain installations. Refer to Section 12 for further details.

This page is intentionally blank.

4 WIRING AND CABLING

4.1 Type Identification

To provide consistency between drawings, all wire and cables types shall be designated utilizing the following format.

4.1.1 Power Conductors

A	-	N	C	+ BND	, Size	, Type	, Volt	, Other
Number of cables (Optional)	-	Number of Cond.		Bonding Conductor (Optional)	Conductor Size	Conductor Type	Voltage Rating	Other

Where,

A	is the number of cables in parallel. For many applications, this is one (1) and therefore is omitted.
N	is the number of individual conductors in the cable or conduit. Include neutral conductors as applicable, unless the neutral conductor is a different size.
C	is the letter C, to indicate “Conductors”.
+ BND	is an optional indication to include a bonding conductor of the same size and type as the power conductors. This would not be utilized for cable assemblies where the bonding conductor is an inherent part of the cable, but could be utilized for conduit applications. If the bonding conductor is a different size of type, refer to Section 4.1.2.
Size	is the conductor size in AWG or kcmil.
Type	is the cable / wire type. Utilize CSA standard type references where applicable. The conductor shall always be copper, unless otherwise indicated.
Volt	is the voltage rating of the cable / wires (Not the applied system voltage).
Other	is an optional field for other special characteristics of the cable, such as “Shielded” or insulation class for medium voltage cabling

Notes:

1. Where individual wires are in conduit, they are expressed as parallel conductors, not parallel cables.
2. Do not utilize the “#” symbol to represent AWG.
3. Do not indicate the bonding conductor if it is part of a standard cable assembly, such as Teck90 cable.
4. Large AWG sizes shall be expressed as follows: 1/0, 2/0, 3/0, and 4/0 AWG and not 0, 00, 000, and 0000 AWG.

4.1.2 Bonding Conductors

Where bonding conductors are a different size or construction from the phase conductors, they shall be designated in the following format. Note that bonding conductors in a conduit, of the same size and type as the phase conductors may be designated as shown in Section 4.1.1.

N	**-**	**BND**	**, Size**	**, Type**	**, Volt**	**, Other**
Number of Cond. (Optional)	-		Conductor Size	Conductor Type	Voltage Rating	Other

Where,

N	is the number of individual conductors in the cable or conduit. Include neutral conductors as applicable, unless the neutral conductor is a different size.
BND	is the shortened designation for bonding conductors.
Size	is the conductor size in AWG or kcmil.
Type	is the cable / wire type. Utilize CSA standard type references where applicable. The conductor shall always be copper, unless otherwise indicated.
Volt	is the voltage rating of the cable / wires (Not the applied system voltage).
Other	is an optional field for other special characteristics of the cable

4.1.3 Neutral Conductors

Where neutral conductors are a different size or construction from the phase conductors, they shall be designated in the following format. Note that neutral conductors of the same size and construction as phase conductors may be identified as per Section 4.1.1.

N	**-**	**NEU**	**, Size**	**, Type**	**, Volt**	**, Other**
Number of Cond. (Optional)	-		Conductor Size	Conductor Type	Voltage Rating	Other

Where,

N	is the number of individual conductors in the cable or conduit. Include neutral conductors as applicable, unless the neutral conductor is a different size.
NEU	is the shortened designation for neutral conductors.
Size	is the conductor size in AWG or kcmil.
Type	is the cable / wire type. Utilize CSA standard type references where applicable.
Volt	is the voltage rating of the cable / wires (Not the applied system voltage).

Other is an optional field for other special characteristics of the cable, such as "Shielded"

4.1.4 Examples

3C, 250 kcmil, TECK90, 1000 V	Three conductor TECK cable in cable tray.
4C, 1 AWG, RW90, 600 V	Four, 1 AWG RW90 wires in conduit.
6-1C, 500 kcmil, RA90, 1000 V	Six parallel 1-conductor cables.
2-3C, 750 kcmil, TECK90, 1000 V	Two 3-conductor cables in parallel.
4C, 10 AWG, RW90, 600 V BND, 12 AWG, RW90, 300 V	Four 10 AWG plus one 12 AWG ground wire.
6C, 250 kcmil, RW90, 600 V 2C, NEU, 3/0 AWG, RW90, 600 V 2C, BND, 4 AWG, RW90, 300 V	Six 250 kcmil plus two 3/0 AWG neutrals plus two 4 AWG bonding wires.
2-3C, 250 kcmil, HVTECK AL, 15 kV, Shielded, 133%	Two three-conductor shielded 15 kV cables, aluminum conductors.

4.2 Conductor Material

1. All conductors shall be copper, except as follows:
   - 1.1 Aluminum conductors may be utilized if and only if:
     - 1.1.1 The load is an MCC, transformer, switchgear, or distribution panel or other similar equipment. Aluminum conductors are not permitted for end loads such as motor loads;
     - 1.1.2 The aluminum conductor is sized a minimum of 250 kcmil; and
     - 1.1.3 All terminations are appropriately rated for aluminum conductors.
2. Ensure the project specifications are clear regarding the conductor material requirements. All aluminum conductors shall be clearly shown on the single line drawings.
3. Ensure all project construction specifications are clear and complete regarding the installation requirements of aluminum conductors.

4.3 Insulation Ratings

1. Provide wire and cable insulation ratings that are consistent with the minimum insulation ratings indicated in Table 4-1.

Table 4-1 : Minimum Wire Insulation Ratings

Nominal 3Ø Voltage	System Grounding	Application	Minimum Insulation Rating
12.47 kV	Low Resistance [1]	Any	15 kV 133%
	Solid	Any	15 kV 100%
4.16 kV	Low Resistance [1]	Any	5 kV 133% or 8 kV 100%
	High Resistance [1]	Any	
	Solid	Any	
600 V	High Resistance	Any	1000 V
	Solid	VFD and other high harmonic loads	1000 V
		Buried Wire / Cables	1000 V
		All Teck90 cables	1000 V
		Indoor RW90 applications– no VFD	600 V
480 V	High Resistance	Buried Wire / Cables	1000 V
		Other	600 V
	Solid	Any	600 V
120/208 V	Solid	Any	600 V

Note:

1. Low Resistance grounding is to be set-up to clear faults within one hour. Higher insulation ratings may be required for systems that allow longer duration faults.

4.4 Power Distribution

4.4.1 Conduits vs. Cables

1. Cables and conduits shall be selected based upon the requirements of Table 4-2.
   - 1.1 Where not identified in Table 4-2, the decision to use conduits or cables for interior power distribution should be based on the specific details of the application. In general, cables in cable tray is preferred for new installations; however there are cases were the use of conduits is appropriate.
2. Conduits should be considered in the following applications:
   - 2.1 Where the existing installation is conduit based.
   - 2.2 Where aesthetics are a concern.
   - 2.3 Where there is potential for physical abuse or damage.
     - 2.3.1 For example, rigid aluminum conduits are preferred in lift stations that have limited space such that the removal of a pump could result in physical damage to the electrical system.
   - 2.4 Where the specific cables required do not have a FT4 rating.
3. It is acceptable for a facility to have a mixture of conduits and cables.

Table 4-2 : Conduit / Cable Applications

Application	Voltage	Cable	Conduit	Notes
Distribution	Medium Voltage	A	NA	1
	< 750 V	A	NA	1
Motor Loads	Medium Voltage	A	NA	
	600 V	P	A	
	208/120 V	A	A	
Heating Loads	600 V	P	A	
	208/120 V	A	A	
Other Equipment Loads	600 V	P	A	
	208/120 V	A	A	
Fire Alarm	< 750 V	A	A	
Lighting	< 750 V	A	P	
Receptacles	< =208 V	A	P	
	> 208 V	A	P	

Legend:
P Preferred
A Acceptable
NA Not Acceptable

Notes:

1. Cable Bus is acceptable for distribution application.
2. Duct bus is acceptable only in clean, non-corrosive environments.

4.5 Cable Types and Ratings

In general, cable with galvanized steel armour covered with PVC outer sheath is acceptable. In very corrosive areas, aluminum armour with PVC outer sheath should be used subject to verifying the suitability of aluminum for the corrosive compounds present.

4.5.1 Cable Requirements

12.47 kV (15 kV Class) Distribution system:

CSA TECK cable, Tree-Resistant XLPE RW90, 15 kV, semi-conductive shielded with insulation as per Table 4-1.

Phase marking/colour codes - Phase A - Red, Phase B – Black, Phase C - Blue.

Outer jacket – Orange/Red PVC jacket rated FT-4.

4.16 kV Distribution system:

CSA TECK cable, Tree-Resistant XLPE RW90, 5kV, semi-conductive shielded with insulation as per Table 4-1.

Phase marking/colour codes - Phase A - Red, Phase B – Black, Phase C - Blue.

Outer Jacket – Orange/Red PVC jacket rated FT-4.

600 V, 208/120 V, 120/240 V Low Voltage Distribution system:

CSA TECK cable, XLPE RW90, 600 V/1000 V, with insulation as per Table 4-1.

Phase marking/colour codes - Phase A - Red, Phase B – Black, Phase C - Blue.

Jacket – Black PVC jacket rated FT-4 and low acid gas emitting. The jacket will be UV, moisture and oil resistant.

Control and Instrumentation cables:

CIC or ACIC, XLPE RW90, 600/300 V, with 100% insulation.

- 600 V cable is to be utilized for any cable termination in an enclosure containing voltages above 300 V.

Phase/polarity numbering marking/colour codes – Standard numbering and colour coding.

Jacket – Black PVC jacket rated FT-4 and low acid gas emitting. The jacket will be UV, moisture and oil resistant.

Fire Alarm Cable

- Cabling conforms to CAN/CSA-C22.2 No. 208 Fire Alarm and Signal Cable
- Low energy, 300 V, FAS 105 twisted stranded coper shielded cable: minimum 16AWG, with PVC insulation
- Overall aluminum/polyester foil shield, with tinned copper drain wire
- Notification circuit conductors shall be stranded copper, minimum 12 AWG
- All fire alarm cables shall be installed in a separate, dedicated conduit system
- All cables with be FT4 rated

4.6 Conductor Sizes

1. Select conductor size based upon conductor ampacity and voltage drop requirements.
   - 1.1 Voltage drop calculations shall be made utilizing worst case operating scenarios, including utilization of spare distribution capacity.
2. Ensure spare capacity allowed for in equipment is also provided in associated feeder conductor sizing.
3. Ensure conductors are appropriately derated as per the Canadian Electrical Code. Derating to include factors for maximum termination temperature, ambient conductor temperature, and the number of conductors in the conduit or cable tray.
   - 3.1 Unless specifically designated as a feeder cable tray, with a cable tray section layout clearly indicated on the drawings, all cable trays shall be assumed to have numerous cables added in the future and be de-rated appropriately.
   - 3.2 It is preferred to designate certain cable trays for large feeder cables, where spacing can be maintained.
4. Do not necessarily size cables as per the minimum ampacity. Utilize good engineering judgement to ensure each cable ampacity will be sufficient for the life of the cable.
   - 4.1 For example, if a motor feeder cable ampacity is calculated, based on a specific actual motor FLA, to be 258 A, do not select a cable with an ampacity of 260 A. In the event the motor is replaced with one that has a slightly higher FLA, the cable with an ampacity of 260 A would no longer be technically acceptable.
5. Ensure that the conductor sizes selected are appropriate for the maximum acceptable conductor termination temperature. For example, many circuit breaker terminations are only rated at 75°C and cannot utilize a conductor ampacity rating for a temperature rating of 90°C.
6. Minimum wire size to be as per Table 4-3.

Table 4-3 : Minimum Conductor Sizes

Application	Minimum Size
Medium Voltage Power (> 1000 V)	2 AWG
Low Voltage Power (120 – 750 V)	12 AWG
Control	16 AWG
Instrumentation	18 AWG
Voltage Signal (PT)	14 AWG
CT Signal	12 AWG

Note:

1. The minimum conductor sizes only apply to electrical power cables. See the Automation Design Guide for automation cable sizes.

4.7 Conduit Materials and Sizes

1. Conduit to be CSA, cUL listed.
2. Use rigid conduit, except where flexible conduits are required for maintenance of equipment or in areas where the equipment is subject to vibrations during operation (compressors, motors, etc.), to reduce the effect on connections. EMT may be utilized within office areas if there are no environmental issues.
3. Rigid galvanized steel conduit is not acceptable for use within wastewater facilities. See Table 4-4.
4. The minimum conduit size is 21 mm (3/4 “).
5. Conduit boxes to be aluminum with cast covers. Use spring door covers for areas with circulating dust and contamination.
6. Liquid tight flexible conduit c/w correct watertight fittings shall be used in short lengths for application areas where vibration will be an issue.
    - 6.1 Flexible conduit to be CSA, cUL listed.
    - 6.2 Maintain fill factors as stipulated in Code.
    - 6.3 All motors and connected equipment shall be considered to be a source of vibration.
7. For areas where conduit is installed and there is a risk of migration of gases and vapour, the conduits are to be sealed with suitable conduit seals to prevent entry of moisture, vapour and gases into another area, panel enclosure, etc.
8. Where EMT and PVC conduit is used, provide a separate green insulated ground wire in each conduit.
9. Ensure fittings allow cable/conductor bending radius to be maintained.
10. Wire pulling calculations shall be performed for all cables in conduits or ducts sized 2 AWG or larger. Modify the design as required to limit forces and sidewall pressure. Document all cable pulling calculations as per Section 19.4.

Table 4-4 : Facility Conduit Application

Facility Type	Application	Type
All	In poured concrete walls and floors	PVC
	Underground	PVC
Wastewater Collections Facilities (Lift, Flood, CSO)	General Use – Where prone to potential mechanical damage or acceptable support spans exceed PVC capabilities.	Rigid Aluminum
	General Use – Where not prone to potential mechanical damage	PVC
	Hazardous Locations	Rigid Aluminum
Wastewater	General Use	Rigid Aluminum
	Corrosive locations not suitable for aluminum	PVC
	Exterior	Rigid Aluminum
	Hazardous Locations	Rigid Aluminum
	Office and similar locations, without environmental contamination.	EMT
Water	Corrosive Locations (Category 2)	PVC
	Exterior	Rigid Galvanized Steel
	General Use	Rigid Galvanized Steel
	Hazardous Locations	Rigid Galvanized Steel
	Office and similar locations	EMT

4.8 Conduit Colour Coding

Code with plastic tape or paint at points where conduit or cable enters wall, ceiling, or floor, and at 5 m intervals based on the system, per Table 4-5. The widths of the prime and auxiliary bands are to be 38 mm and 19 mm, respectively.

Table 4-5 : Conduit Colour Bands

System	Prime Band	Aux. Band
Medium Voltage (> 750 V)	Orange	
347/600 V	Yellow	
208/120/240 V Power	Black	
UPS 208/120/240 V Power	Black	Green
Control Wiring (120 V)	Black	Orange
Fire Alarm	Red	
Low Voltage Communication/General	Blue	
Low Voltage Control Wiring (< 50 V)	Blue	Orange
Intrinsically Safe	Blue	White
Grounding	Green	
Fibre Optic Cable	Purple	

4.9 Device and Pull Boxes

1. Joints and splices are not acceptable in conduits. All joints shall be in conduit bodies or junction boxes.
2. Only connections for lighting and receptacles shall be made in device boxes. All other connections shall be made in boxes with numbered terminals and the conductors shall be identified with wire labels.
3. Pull boxes should be sized as per the Canadian Electrical Code (Rule 12-3036).

4.10 Cable Trays

4.10.1 General

1. Arrangement
   - 1.1 Design cable trays in a manner to provide ease of access, capacity for expansion and change.
   - 1.2 Ensure headroom is not impeded by cable trays.
   - 1.3 Do not install cables for redundant systems in the same cable tray.
   - 1.4 Provide a minimum of 1 m separation (edge to edge) between cable trays carrying redundant cables or cables for redundant systems.
   - 1.5 Ensure cable tray routing does not impede equipment operation, maintenance or cable replacement;
   - 1.6 Locate cable tray in a manner and location to ensure the full life and reliability of the cables is maintained;
   - 1.7 Route such that the cable tray is not subjected to temperatures higher than ambient space temperatures; and
   - 1.8 Do not route cable trays above any combustible material storage.

2. Size:
   - 2.1 A side rail height of 152 mm (6”) is preferred. Utilize 102 mm (4”) side rail height where vertical space is limited.
   - 2.2 Size cable tray to meet current and future cable requirements. Minimum tray width is 152 mm (6”).
3. Tray to be CSA, cUL listed.
4. The rungs of the ladder shall typically be at 305 mm (12”) spacing. However for single conductor 1/0 to 4/0 AWG the rung spacing shall not exceed 229 mm (9”).
5. Tray load ratings:
   - 5.1 Cable tray load ratings are to be sufficient for the cables installed and any additional loads such as snow, ice and wind, where applicable.
   - 5.2 Allow for spare cables in cable tray loading calculations. For trays where cables may be installed with no spacing, assume the tray will be filled in the future.
   - 5.3 Minimum load rating for indoor tray: CSA Class C1
   - 5.4 Minimum load rating for outdoor tray: CSA Class D
6. The tray shall be installed in accordance with manufacturer’s instructions.
7. Use tray covers in dusty areas, outdoors, for aesthetic reasons and for trays passing under walkways or where there is a risk of falling debris.
8. Use stainless steel SS316 bolting and fixing hardware.
9. Select cable tray material as per Table 4-6.
   - 9.1 Utilize fibreglass cable tray in corrosive locations where fibreglass will outperform the alternatives. Fibreglass tray shall not be exposed to sunlight unless confirmed by the manufacturer that it is sunlight/UV resistant.

Table 4-6 : Standard Cable Tray Material

Application	Standard Material	Alternates
Wastewater Collection / Treatment	Aluminum	Fibreglass Stainless Steel
Water Treatment Plant	Aluminum	Fibreglass Stainless Steel
Regional Water Pumping Stations	Rigid Galvanized Steel	Aluminum Fibreglass Stainless Steel

4.11 Buried Installation Requirements

1. All buried cables and conduits shall be protected by treated planks or concrete blocks. Concrete blocks or cast-in place red-dyed concrete shall be utilized in applications with a high reliability requirement.
2. Bright orange vinyl warning tape shall be installed above all buried cable installations, including above duct banks.
3. Buried cable installations shall be based upon the requirements of CSA standard C22.3 No. 7 for underground systems.
4. Where buried cable installations terminate into indoor equipment, bottom equipment entry is required to avoid potential water migration issues. Where top entry of equipment is required ensure that potential water migration through cables is addressed.
5. Direct buried cables:
   - 5.1 Provide a minimum of 100mm of sand cover on all sides of the cable. Provide additional depth below cables for critical applications.
   - 5.2 Provide cable slack loops as required to address ground movement.
   - 5.3 Provide water-tight seals at the building entry.
6. PVC conduit:
   - 6.1 The use of PVC DB2 conduit for buried applications is only permitted for certain applications, as indicated in Table 4-7.
   - 6.2 Arrange PVC conduit such that drainage is provided to a suitable location.
   - 6.3 Transition from underground to above ground shall use PVC rigid conduit. Expansion fittings shall be provided where required.
   - 6.4 Provide water-tight seals at the building entry.
   - 6.5 Provide a minimum of 100mm of sand cover on all sides of the conduit. Provide additional depth below conduits for critical applications.
7. Concrete duct banks (and utilidors):
   - 7.1 Underground duct banks will be PVC DB2 ducts, sized 50mm or larger, encased in concrete.
   - 7.2 A minimum spacing of 50mm between ducts, and outer covering of 75 mm of concrete must be maintained.
   - 7.3 Duct runs will be sloped to drain any water entering the system, towards manholes provided with a sump pit.
   - 7.4 Pull boxes will be drained individually or use a connected network of drainage pipes. Pull boxes will be drained using:
     - 7.4.1 Connection to the land drainage infrastructure;
     - 7.4.2 Connection to a building's sump pump system; or
     - 7.4.3 Connection to a pump station.
   - 7.5 All duct banks shall have a minimum of one duct allocated for fibre optic systems.
   - 7.6 Provide a minimum of 20% spare ducts.
   - 7.7 Ensure that the pull boxes are sized to account for minimum bending radius as per the Canadian Electric Code for both installation and long term use.
   - 7.8 All penetrations required in the pull boxes for cable entry/exits and pull box connections shall be included in the design.

7.9 The duct bank system shall be designed with a grade on each section of duct bank to prevent water from ponding in the ducts.

7.10 Pull boxes shall be watertight.

7.11 Pull boxes shall be mounted on appropriate foundations as required to prevent movement.

7.12 Pull tape shall be installed in all the ducts and shall be suitable for the highest applicable pull tensions.

Table 4-7 : Buried Installation Requirements

Application	Acceptable Installations	Notes
Control / Communications – Std. Reliability Requirement	Buried armoured cable	
	PVC Conduit	
Control / Communications – High. Reliability Requirement	Concrete Duct Bank	
	Buried armoured cable	Cables to be protected by concrete blocks / concrete.
Low Voltage Power < 750 V – Std. Reliability Requirement	Buried TECK Cable	
Low Voltage Power < 750 V – High Reliability Requirement	Concrete Duct Bank	
	Buried TECK Cable	Cables to be protected by concrete blocks / concrete.
Medium Voltage – Std. Reliability Requirement	Concrete Duct Bank	
	Buried TECK Cable	Cables to be protected by concrete blocks / concrete.
Medium Voltage – High Reliability Requirement	Concrete Duct Bank	

4.12 Terminations

4.12.1 Power Wiring – Medium Voltage

1. Lugs
   - 1.1 Two-hole long barrel (double crimp) lugs shall be utilized wherever possible.
   - 1.2 Belleville washers shall be used on all bolts.
2. Medium voltage terminations shall be heat shrink type, CSA, cUL listed and tested to IEEE standards.
3. For 1/C cable – single (1/C) terminations are required with grounding kits.
4. For 3/C cable – one three conductor (3/C) termination kit is required with grounding kit.

4.1 A breakout boot is required for outdoor installations or those where any possibility of moisture or debris is present.

5. Shielded cables are to be grounded at both ends for three conductor cables, or three single conductors in one duct or conduit. Shielded cables <= 250 kcmil installed in separate ducts must also be grounded at both ends. Ensure that the cable ampacity accounts for shield heating due to circulating currents. Cable ampacity adjustments are a requirement > 250 kcmil where the phase conductors are in separate ducts.

6. All shielded cables proposed to be bonded at one end only require approval of the City, along with supporting calculations of the safety of the installation.

7. Use in-line terminations for motor terminations.

8. Generally for medium and high voltage, *creepage extending sheds* are not required to be used for Indoor areas. However if the termination is installed in an indoor area where there is a presence of high humidity, saturated water vapour or presence of free droplets then these sheds shall be used. Sheds shall always be installed with the open end of the cone down irrespective of whether the termination is installed “up” or “down”. Creepage extending sheds are required on outdoor terminations.

4.12.2 Power Wiring – Low Voltage (< 750 V)

1. Lugs

   1.1 Two-hole long barrel (double crimp) lugs are preferred over mechanical connectors for high ampacity and critical applications.

   1.2 Belleville washers shall be used on all bolts.

4.12.3 Control Wiring – Low Voltage

1. Wire barrel ferrules shall be used for all stranded wiring connections to terminals.

2. Wire labels shall be used wherever a wire is terminated.

4.13 Framing and Support Systems

1. Utilize strut framing and support systems from a single manufacturer for each project.

2. Materials shall be as per Table 4-8.

Table 4-8 : Framing and Support Materials

Application	Application	Preferred Material	Alternate Material	Hardware
Wastewater Collections and Treatment	All	Aluminum	Stainless Steel	Stainless Steel
Water Treatment	All	Aluminum	Stainless Steel	Stainless Steel
Regional Water Pumping Stations	All	Galvanized Steel	Stainless Steel	Stainless Steel

4.14 Segregation of Systems

1. Segregation of cable systems shall be as per Table 4-9. Note that typical good design practice would be to allocate a separate cable tray for power cables vs. instrumentation cables.

Table 4-9 : Segregation of Cable Systems

Cable	Other Cable	Minimum Segregation	Notes
Communication - Fibre	Communication	None	
	Instrumentation / Control < 50 V	None	
	Other	Separate Raceway	To reduce risk of physical damage to fibre cable.
Communication - Copper	Instrumentation / Control < 50 V	50 mm	
	120 VAC, 8 AWG or smaller	100 mm	
	120 VAC, > 8 AWG	300 mm	
	600 VAC Power	300 mm	
	VFD or other high harmonic cable	300 mm	Metallic Conduit
		600 mm	Other raceway
	Medium Voltage – 3C armoured and shielded	300 mm	May be in metallic conduit instead of armoured.
	Medium Voltage – 1C or 3C unshielded	450 mm	
Instrumentation (Analog)	Control < 50 V	None	
	120 VAC, 8 AWG or smaller	100 mm	
	120 VAC, > 8 AWG	300 mm	
	600 VAC Power	300 mm	
	VFD or other high harmonic cable	300 mm	Metallic Conduit
		600 mm	Other raceway
	Medium Voltage – 3C armoured and shielded	300 mm	May be in metallic conduit instead of armoured.
	Medium Voltage – 1C or 3C unshielded	450 mm	

Cable	Other Cable	Minimum Segregation	Notes
Control < 50 V	120 VAC, 8 AWG or smaller	50 mm	
	120 VAC, > 8 AWG	300 mm	
	600 VAC Power	300 mm	
	VFD or other high harmonic cable	300 mm	Metallic Conduit
		450 mm	Other raceway
	Medium Voltage – 3C armoured and shielded	300 mm	May be in metallic conduit instead of armoured.
	Medium Voltage – 1C or 3C unshielded	450 mm	
120 VAC Control	120 VAC, 8 AWG or smaller	none	
	120 VAC, > 8 AWG	Metal barrier or 150 mm	
	600 VAC Power	Metal barrier or 150 mm	
	VFD or other high harmonic cable	150 mm	Metallic Conduit
		300 mm	Other raceway
	Medium Voltage – 3C armoured and shielded	300 mm	May be in metallic conduit instead of armoured.
	Medium Voltage – 1C or 3C unshielded	450 mm	
120 VAC Power	600 VAC Power	Metal barrier	Cable Armour is acceptable
	VFD or other high harmonic cable	100 mm	Metallic Conduit
		150 mm	Other raceway
	Medium Voltage – 3C armoured and shielded	300 mm	May be in metallic conduit instead of armoured.
	Medium Voltage – 1C or 3C unshielded	450 mm	
600 VAC Power	VFD or other high harmonic cable	100 mm	Metallic Conduit or both armoured cables
		150 mm	Other raceway
	Medium Voltage – 3C armoured and shielded	150 mm	May be in metallic conduit instead of armoured.
	Medium Voltage – 1C or 3C unshielded	300 mm	

4.15 Redundant Cables

1. Redundant cables are two or more cables serving the same system, or parallel systems serving the same objective, where the failure of one cable does not compromise the operation of the load.
2. Redundant cables should be physically and electrically separated to the greatest extent possible. The goal shall be that no single event would prevent the ultimate operation of the load.
3. Routing of redundant wires / cables within the same conduit or cable tray is not acceptable.
4. Redundant medium voltage cables shall not be closer than 1 m at any point along the length of the cables.

5 LIGHTING

5.1 Fixture Type Selection

1. The types of lighting fixtures and their mounting methods shall be selected to satisfy the various project requirements and conditions. Particular attention to colour renditions, light distribution and stroboscopic effects is needed when choosing the type of lamps, starting system, controls and reflection accessories. Due consideration shall also be given to the provision of proper re-lamping facilities. Specifically, care shall be taken to avoid the need for scaffolding or the need to drain tanks or to shut down processes in order to re-lamp or repair light fixtures safely.
2. Utilize industrial grade fixtures and components in process areas.
3. Refer to Table 5-1 for a general comparison of various fixture types.
4. Fluorescent or LED fixtures are preferred for most indoor applications as they provide instant on capability.
5. Light fixtures must be selected for the correct environment and installed (mounted) to facilitate lamp replacement and maintenance. Where corrosive gasses may be present, utilize sealed fixtures which are resistant to the specific corrosive atmosphere. Selection of accessories and other related materials must also bear the same degree of protection and be properly installed.
6. Refer to Table 5-2 for fixture selection for various applications. Note that the specific requirements of each application must be considered prior to final selection. Where an alternate type of lighting is proposed, review the proposed selection with the City.
   - 6.1 Lifecycle costs of original price, lamp replacement, and energy use will guide the choice of lighting fixtures employed.
7. The final number and array of fixtures used in the final required design must be supported by calculation using recognised methods; the use of vendor software is acceptable. The final design must ensure that the illumination levels will be met and maintained for the specified maintenance requirements and re-lamping intervals.
8. Select light fixtures to require minimal cleaning and permit practical and easy access and disassembly.

Table 5-1 : Fixture Type Comparison

Type	Efficacy	L70 Lamp Life (hrs)	Colour Rendering Index (CRI)	Instant On	Cost	Notes
Fluorescent	80 – 100	24K – 40K	80 – 90	Yes	$	Not suitable for outdoor
High Pressure Sodium (HPS)	100 – 130	24K – 30K	22	No	$	Not recommended for indoor.
Induction	60 – 75	100K	80	Yes	$$	
LED	70 – 140	50K – 70K	65 – 85	Yes	$$	
Metal Halide (MH)	70 - 120	12K – 20K	65 - 90	No	$	

Note:

1. Cost is the construction cost, not the operating cost.

Table 5-2 : Lighting Fixture Types

Facility Type	Area	Fixture Type	Notes
All	Mechanical Rooms	LED or F32T8	
	Electrical Rooms	LED or F32T8	
	Control Rooms	LED or F32T8	
	Offices	LED or F32T8	
	Washrooms	LED or F32T8	
	Stairways - switched	LED or F32T8	
	Stairways – always on	LED	
	Corridors	LED or F32T8	
	Bright Locations such as Instrument Shop	LED or F54T5HO	
	High-Bay Applications	MH, Induction or F32T8	
	Emergency Lighting	LED	
	Exterior - Building Entrances	HPS or LED	
	Exterior - Driveways	HPS or LED	
Wastewater Lift Station	All interior spaces	LED or F32T8	
Flood Pumping Station	All interior spaces	LED or F32T8	
Water Pumping Stations	All interior spaces	LED or F32T8	

5.2 Lighting Control

1. Lighting controls shall be provided to reduce the energy consumption of the facility while minimizing impact on personnel.
   - 1.1 Requirements of the Manitoba Energy Code for Buildings may exceed requirements herein.
2. Design lighting control to permit simple and integrated control of lighting.
   - 2.1 Ensure lighting controls can be easily operated.
   - 2.2 Ensure lighting controls are conveniently located for each area and function.
   - 2.3 Provide capability to control lighting at each entrance to the space. Doors utilized exclusively as emergency exits are not required to have lighting controls.
3. Provide highly controllable lighting in control rooms with multiple lighting schemes to support day and night monitoring of HMI screens, meetings, cleaning and other functions without eye-strain to personnel. Scenes shall include but not be limited to:
   - 3.1 Full lighting on;
   - 3.2 Dimmed (50%);
   - 3.3 Dimmed + task lighting, zoned by working areas.
4. Provide highly controllable lighting in conference and meeting rooms with multiple lighting schemes to support meetings, A/V presentations, and video conferencing. Control of lighting will be integrated with the equipment controls and control stations in the room so as to permit the attendees to vary the ambient and task lighting as required for different activities. All conference and meeting rooms shall be provided with dimming down to 5%. Lighting will have minimum of four levels of control.
5. Where lighting controls are required to be located in areas accessible to the public, protect the controls from unauthorized operation.
6. Provide capability of overriding the night setback control.
7. All lighting controls shall be appropriate and appropriately rated for the area in which they are located. Commercial grade lighting controls are not acceptable within process areas.
8. In large open process areas, arrange and zone lighting controls to permit energy management control and variation of light levels. However, provide consideration to operational and maintenance requirements and ensure that the lighting control scheme does not negatively impact personnel.
9. Controls for lighting will be controlled utilizing a zone control of lighting. Zoning control to provide automatic night setback with sweep ‘off’ per programmable time (i.e. two hours) throughout the night to turn off lights that may have been manually turned on by staff via a local light control. Ensure safety considerations are addressed to avoid leaving staff in the dark through the use of warning or other appropriate mechanisms.
10. Lighting control system will be interfaced to the PCS to permit override ‘100% on’. Lighting program will be established to address different conditions such as power outage and fire alarm.
11. Where significant glazing is provided, utilize daylighting controls for all lighting in areas adjacent to exterior glazing and provide dimming to 10% of lamp output.
12. Occupancy sensors and, where provided, daylighting controls, will be integrated into the lighting controls.

13. Where always on and delayed off lighting is applied, more than one luminaire and more than one lighting circuit shall be used in each area to implement this strategy.
14. Refer to Table 5-3 for potential methods of lighting control. Note that the list is not exhaustive.
15. Refer to Table 5-4 for typical lighting control application requirements. Note that this table is not deemed to be mandatory, and each application should be reviewed with the City.

Table 5-3 : Lighting Control Methods

Legend	Method	Description
AO	Always On	Lighting is always on.
D	Dimmable	
MS	Master Switch	Contactors are utilized to switch multiple circuits from one switch.
MSPDO	Master Switch Partial Delay Off	A master switch is utilized, but upon turning the lighting off, a portion of the lighting remains on for a time delay. In the event that someone is still in the building, this provides the occupants opportunity to exit.
OS	Occupancy Sensor	An occupancy sensor is utilized to control lighting in the room. Timers will turn off the lighting after occupancy is not detected for a set period of time.
OSM	Occupancy Sensor with Manual On-Off Switch	An occupancy sensor with a timer and a manual On-Off switch to override the occupancy switch.
PC	Photocell Control	The lighting is controlled by ambient light.
S	Switch	Standard switches are utilized for each lighting circuit. The switches may be a 3-way/4-way circuit as required.
S/AO	Switched / Always On	Combination switched lighting and partial always on. Also known as a night-lighting arrangement.
T	Timer	The lighting turns on and off via a timer.
TO	Timer with Override	The lighting turns on and off via a timer, but an override system is present to allow personnel to turn the lighting on during typical off hours.
TO/AO	Timer with Override and partial lighting always on	Same as TO, except that a night-lighting circuit is present to provide a low level of base lighting.

5.3 Illumination Levels

1. Illumination levels must meet or exceed requirements of building codes and fire safety norms for exit lighting and the requirements of this document, whichever is greater.
2. Refer to Table 5-4 and Table 5-5 for required illumination levels for various applications.
3. Use the following criteria as maximum factors for calculation of illumination levels:
   - 3.1 Luminaire dirt depreciation: 0.80
   - 3.2 Luminaire lumen depreciation: 0.85
4. Where light fixtures may be subject to significant accumulating dust or splatter, utilize a lower luminaire dirt depreciation factor.

Table 5-4 : Illumination Requirements - General

Area	Minimum / Average Illumination (lux)	Control (See Table 5-3)	Notes
Control Rooms	400 / 450	D + OSM	
Corridors – High or Public Use	200 / 250	AO TO/AO	
Corridors – Low Use	100 / 150	S TO/AO	
Electrical Rooms	450 / 500	S S/AO	
Electrical Shop	500 / 550	S	
Instrument Shop	750 / 850	S	
Janitor Rooms	200 / 250		
Laboratory	–700 / 800	D + OSM	
Locker Rooms	150 / 200	OS	Utilize ultrasonic or other appropriate technology to avoid lights turning off while in shower.
Mechanical (HVAC) Rooms	200 / 250	S S/AO	
Offices	450 / 500	OSM	
Outdoor - Building Entrances	75 / 100	Photocell	
Outdoor Electrical Substations	10 / 20	Photocell	Base lighting
	250 / 300	S	.
Outdoor - Sidewalks and Walkways	10 / 15	Photocell	
Meeting Rooms	450 / 500	D + OSM	
Parking Lots	20 / 25	Photocell	
Process Areas - Indoor	300	S/AO TO/AO	
Process Areas - Outdoor	25 / 35	Photocell	Walkways
	150 / 200	S	Or higher as required to operate and maintain the process
Roads	–10 / 15	Photocell	
Server Rooms	450 / 500	OSM	
Stairways – High or Public Use	200 / 250	AO TO/AO	

Area	Minimum / Average Illumination (lux)	Control (See Table 5-3)	Notes
Stairways – Low Use	100 / 150	AO TO/AO	
Storage Rooms	125 / 150	OSM	
Washrooms	150 / 200	OS	
Workshop - Mechanical Maintenance	500 / 550	S TO/AO	
General – Not Specified	250 / 300	TBD	May discuss with City

Table 5-5 : Illumination Requirements - Specific

Facility Type	Area	Recommended Illumination (lux)	Control (See Table 5-3)	Notes
Wastewater Lift Station	Main Level – Electrical Area	300 - 350	S MS	
	Main Level – Non Electrical	250 - 300	MSPDO	
	Lower Levels including Pump Room	150 – 250	MSPDO	
	Areas not accessed for regular maintenance	100	S	
	Exterior equipment such as valve actuator.	50	S	
Flood Pumping Station	Main Level – Electrical Area	300-350	S	
	Main Level – Non Electrical	250 - 300	S	
	Lower Levels including Pump Room	150 – 250	S MSPDO	Select control as appropriate.
	Areas not accessed for regular maintenance	100	S	
	Exterior equipment such as valve actuator.	50	S	
Other Facilities	Areas with Small / Delicate Equipment.	500+	TBD	Select control as appropriate.
	Areas Requiring Frequent Inspection / Maintenance	300	TBD	
	Areas Requiring Routine Inspection / Maintenance	250	TBD	
	Areas Requiring Minimal Inspection / Maintenance	100 - 200	TBD	
	Areas Requiring Infrequent Inspection / Maintenance, but performance of visual tasks of small size is required.	300	TBD	

5.4 Fixture Location Requirements

1. Locate fixtures to avoid interference with ductwork, piping, cable trays, and other items which may block the light or impede fixture access.
2. Where practical, lighting should not require scaffolding, fall arrest equipment, the drainage of tanks or the disruption of operations for it to be serviced safely and in accordance with safety legislation. Fixtures that are accessible via the use of a small motorized scissor lift are satisfactory, provided that the facility has ready access to a scissor lift, and the scissor lift can easily be brought to the applicable space.
   - 2.1 LED fixtures shall be accessible. Despite longer intervals between service, access is still required for lamp/lens cleaning and other maintenance.
3. Locate fixtures to avoid the accumulation of dust and spatter so far as practical.

5.5 Emergency Lighting and Associated Power Source

1. Emergency lighting must be installed in all facilities.
2. The emergency lighting power supply shall be one or more of the following:
   - 2.1 Unit based battery back-up units.
   - 2.2 Centralized UPS power, dedicated for lighting and separate from the control system UPS.
   - 2.3 An emergency generator.
3. Utilize an emergency generator set to power emergency lighting, or a combination of battery supported emergency lighting with a standby generator, for mid to large sized facilities, where the facility may require occupancy during a power failure.
4. Where an emergency generator is utilized for emergency lighting:
   - 4.1 The generator installation shall comply with CSA C282.
   - 4.2 The emergency power system shall be separated from any non-life-safety loads via a separate transfer switch.
5. Where battery-based emergency lighting is utilized:
   - 5.1 Minimize the number of batteries utilized for unit-based emergency lighting.
   - 5.2 All batteries used in the unit shall be sealed maintenance free type, 10-year rated. Ensure the recommended date for first battery replacement is provided to the City project manager, to allow the required work to be added to City maintenance schedules.
   - 5.3 The units shall have auto-test capability.
   - 5.4 The size of circuit conductors to remote lamp heads shall be such that the voltage drop does not exceed 5% of the marked output voltage of the unit equipment, or such other voltage drop for which the performance of the unit is certified when connected to remote lamp.
   - 5.5 Unit emergency lighting equipment and lighting control units, other than remote lamp heads shall not be installed in wet or corrosive locations.
6. Emergency power supply shall have adequate capacity and rating to ensure that all connected equipment can be operated safely when the normal power source fails.
7. Emergency lights shall be arranged so that the failure of any one lamp will not leave the area in total darkness. Use double lamp heads.

8. No other appliance or equipment other than for emergency purpose shall be supplied by the emergency power circuit.

9. In the event an emergency generator is utilized to provide emergency lighting, provide additional battery based unit emergency lighting in the following locations:

    9.1 Generator room

    9.2 Major electrical rooms

    9.3 Major control rooms.

10. Typical emergency lighting application requirements are indicated in Table 5-6.

Table 5-6 : Typical Emergency Lighting Requirements

Facility Type	Area	Recommended Emergency Illumination (lux)	Min. Duration (hours)	Notes
All	Below-Grade Walkways	> 10	0.5	
	Control Rooms	> 50	2	
	Corridors – High Use	> 20	0.5	
	Corridors – Low Use	> 10	0.5	
	Electrical Room	>10	1	Illumination should be above 50 lux on the front of all critical equipment.
	Electrical Substation – Outdoor	See Note 2	See Note 2	
	Exits	> 10	0.5	
	Generator Rooms	> 50	3	
	Laboratory	> 10	0.5	
	Mechanical Rooms	> 10	0.5	Along egress path.
	Offices	Not Req.	-	Required for corridors
	Process Areas	> 10	0.5	On major walkway / exit path
	Stairways – High Use	> 20	0.5	
	Stairways – Low Use	> 10	0.5	
	Washrooms – One Person	Not Req.	-	
	Washrooms – Multiple People	> 10	0.5	
	Workshop	> 10	0.5	On major walkway through area.
Wastewater Lift Station	Main Level	> 10	1	
	Lower Levels including Pump Room	> 10	0.5	
	Areas not required for regular maintenance	Not Req.	-	

Notes:

1. There will be exceptions to the above table. Exceptions are to be reviewed and approved on a case-by-case basis.
2. The requirement for emergency lighting in an outdoor electrical substation shall be determined on a case-by-case basis.
3. Minimum code requirements shall be adhered to.

5.6 Requirements for Exit Signs

1. Exit signs shall be provided for all facilities, where required by code or egress would not be clear under all circumstances.
2. LED exit signs are the standard of acceptance. All alternatives must be approved by the City.
3. Exit signs shall comply with requirements of the City of Winnipeg Electrical Bylaw, the National Building Code of Canada with Manitoba Amendments and the National Fire Code.
4. Exit signs shall be installed such that they are visible and point towards the direction of building exit.
5. Preferably exit signs shall indicate a running person pictogram figure with arrow sign indicating direction of exit. In existing facilities, exit signs shall match the type of sign used elsewhere in the facility.
6. Where an emergency generator is available, avoid the use of battery based systems if possible, except as noted herein.
7. Where batteries are utilized, all batteries used in the unit shall be sealed 10-year rated maintenance-free type.

6 EQUIPMENT DESIGN REQUIREMENTS

6.1 DC Power Supply

6.1.1 125 VDC Power Supplies

1. DC power supplies may be utilized for switchgear control power, as per Section 6.10.
2. The voltage for switchgear DC power supplies shall be 125 VDC, ungrounded.
3. Provide ground fault detection with alarming on all ungrounded conductors.
4. As a minimum this system or any individual unit, shall consist of a battery bank, a battery charger and a DC distribution board.
5. Batteries shall be Valve Regulated Lead Acid (VRLA). Battery sizing to be based upon the application requirements per IEEE Standard 485 “Recommended Practice to Size Lead Acid Batteries for Stationary Applications”, but at minimum shall be sized to allow:
   - 5.1 Ten hours of continuous standby current, plus
   - 5.2 One operation for all momentary loads (e.g., one breaker trip and close for all breakers).
6. Preferred input voltage is 600 V, 3-phase. Alternately, 208 V, 3-phase may be utilized with approval of the City.
7. The battery charger shall have the following features:
   - 7.1 Provide input AC voltmeter for each phase (or utilize voltage selector switch).
   - 7.2 Provide a rectifier output DC voltmeter.
   - 7.3 Provide minimum of two 2-pole DC rated output load circuit breakers (2-pole, 250 V DC) for 125 V DC load circuits. One breaker is to be utilized for the DC distribution panelboard. The second breaker is for connection to a second panelboard, if required, or utilized as a future spare.
   - 7.4 Provide one DC Battery circuit breaker (2-pole, 250 V DC) for connecting the 125 V DC battery bank.
   - 7.5 Provide a load DC ammeter.
   - 7.6 Provide an auxiliary contact relay output and alarm for AC power failure.
   - 7.7 Provide a low DC battery voltage alarm to indicate battery over discharge.
   - 7.8 Provide high DC output voltage alarm and high DC output voltage automatic shutdown.
   - 7.9 Provide “no-charge” alarm to indicate charger has no DC output.
   - 7.10 Provide DC ground detector relay and alarm (+ve and –ve).
   - 7.11 Provide local indication and annunciation, as well as relay contacts for PLC/DCS/SCADA monitoring of all alarms including: failure of AC power, low DC voltage, high DC voltage, no rectifier output.
   - 7.12 Provide an equalize timer, automatic reset type with charge time compatible with battery type. Equalize interval shall be settable from 0-28 days.

6.1.2 24 VDC Power Supplies

1. The common conductor, in many cases labelled as the negative terminal, from 24VDC power supplies shall be grounded at the DC power supply.

6.2 Electric Heating

6.2.1 General

1. Tubular heating coils are required.
2. Ensure a high temperature cut-out is provided for electric heaters.
3. Ensure an airflow proving switch is provided for all forced air electric heaters.
4. SCR systems should be utilized for applications requiring proportional control. Zero-crossing SCR systems are preferred to reduce harmonics.
5. For heaters > 50 kW where proportional control is required, consider utilizing staging in addition to SCR control.

6.2.2 Heater Voltage Levels

1. Heater voltages should be selected based upon the nominal system voltage. For example, the heater voltage rating should be 600 V on a 600 V rated system, and not 575 V.
2. The preferred voltage levels for various electric heater sizes are shown in Table 6-1.

Table 6-1 : Acceptable Heater Voltage Levels

Heater Rating	Voltage Levels	Acceptable	Notes
< 1.5 kW	120 V, 1Ø	Yes	
	208 V, 1Ø 240 V, 1Ø	Yes	
	208 V, 3Ø	Yes	
1.5 kW – 4.9 kW	24 , 1Ø	Specific Cases	Only where three phase power is not available
	208 V, 3Ø	Yes	
	600 V, 3Ø	Yes	
5.0 kW – 9.9 kW	208 V, 1Ø 240 V, 1Ø	No	Except with City approval due to extenuating circumstances
	208 V, 3Ø	No	Except with City approval due to extenuating circumstances
	600 V, 3Ø	Yes	
> 10 kW	600 V, 3Ø	Yes	

6.3 Motor Control Centres

6.3.1 Low Voltage MCC (600 V)

1. Typically, MCCs will be 3-phase, 3-wire. The use of 4-wire MCCs should not be typical, and should only be utilized where accepted by the City.
2. Enclosure Type: NEMA 1 with gaskets or better if the application requires.
3. Wiring Type: Class 1, Type B-D or B-T.
4. Busbars: Tin-plated copper.
5. Short circuit withstand rating is based on fault level calculations at the point of connections.
6. Provide thermographic inspection windows in MCCs (or compartments as applicable) with an arc flash rating of 8 cal/cm2 or greater.
7. Use surge arrestors at line terminals if MCC BIL rating is inadequate to meet system BIL requirements.
8. Provide a Transient Voltage Surge Suppressor (TVSS) at each MCC where there is possibility of transient voltages. Connect the TVSS to the control system for monitoring.
9. Utilize active harmonic filters or other harmonic mitigation means on MCC's that have VFD's or other harmonic sources as required to achieve a bus and incoming feeder harmonic level in accordance with Section 3.10.
10. Provide clearances around the MCC in accordance with Code requirements and the following, whichever is greater:
    - 10.1 Front of MCC: 1.5 m
11. As per Section 9.2 Table 9-2, equip MCCs with a power meter complete with a Modbus TCP communication interface to provide real-time measurements of voltage, current, power, power factor, and energy consumption.
    - 11.1 Power meters may be omitted for small applications, where approved by the City.
    - 11.2 Provide meter with harmonic voltage and current measurement capabilities where significant harmonics are present.
12. As required by Table 6-2, and Section 9.3, provide a voltage monitoring relay with dry alarm contacts for connection to the control system.
    - 12.1 Voltage relay to alarm on any phase loss or voltage imbalance > 10%.
    - 12.2 Voltage relay to automatically reset upon restoration of power.
    - 12.3 Standard of acceptance to be ABB SSAC WVM011AL.
    - 12.4 The voltage monitoring relay functionality may be combined with the power meter, provided all power failure modes are accounted for in the design.
13. All components shall be CSA approved or cUL listed.
14. Motor control circuits shall be 120 VAC and powered by a dedicated control power transformer within each motor starter.
    - 14.1 Size control power transformers with a minimum of 50 VA capacity above that required for starter components.
    - 14.2 Protect CPTs with two fuses on the primary winding and one fuse on the secondary. The secondary neutral shall be connected to ground.

15. Where space permits, provide a total of four individual and reversible auxiliary contacts from the contactor (3 NO & 1 NC). The contacts shall be wired to an isolated section of the starter's terminal block

16. Ensure motor protection and control is consistent with Section 7

17. All motor overloads are to be of electronic type, to allow for improved protection, easier adjustment of settings, and better phase-loss protection.

    17.1 It is preferred to connect overload contacts on the line-side of the contactor coil, to ensure that overload protection is not lost in the event of a contactor coil ground fault.

18. Smart / Intelligent MCCs have integrated communications capability to allow the control system to directly monitor and control the motor starters via a network. Smart / Intelligent MCCs are required for many new MCC installations.

    18.1 Apply smart/intelligent MCCs as per Table 6-2.

    18.2 Coordinate with the City to determine if the City has a current standard regarding manufacturer and/or communication protocol.

19. Drawing Requirements

    19.1 Provide a MCC Layout Drawing as per Section 19.2.10.

    19.2 Provide a MCC Schedule as per Section 19.2.11.

Table 6-2 : MCC Application Requirements

Facility Type	Voltage Monitoring Relay	Smart MCC	Notes
Wastewater Flood Station	Yes	No	
Wastewater Lift Station	Yes	No	
Wastewater Treatment Facility	See Note 1	Yes	
Water Pumping Station	Yes	Yes	
Other	See Note 1	TBD	Review on a case-by-case basis.

Note:

1. Refer to Section 9.3.

6.3.2 Medium Voltage MCC

1. Short circuit withstand rating is based on fault level calculations at the point of connections.

2. Use surge arrestors at line terminals if MCC BIL rating is inadequate to meet system BIL requirements.

3. The motor controllers shall be rated and designed for starting method to be compatible with motor starting characteristics.

4. The motor controllers shall be equipped with a motor protection relay having a Modbus/TCP communication interface to convey status monitoring and control commands from external Control system.

5. The MCC busbar and connections shall be designed to withstand electromechanical stresses of across the line motor starting.
6. The Main MCC busbar shall be designed to withstand and carry rated fault current.
7. MCC shall be equipped with a power meter complete with a Modbus/TCP communication interface to provide real-time measurements of Voltage, Current, Power, Power Factor, and Energy consumption.
8. All MCC components shall be motor horsepower rated. All components shall be CSA approved or cUL listed. IEC components are not acceptable.
9. Motor control circuits shall be 120 VAC or 125 VDC.
10. Provide thermographic inspection windows in all medium voltage MCCs.
11. Apply other design requirements from Section 6.3.1, as applicable.

6.4 Moulded Case Circuit Breakers

1. Protection Requirements:
   - 1.1 Provide electronic trip units with appropriate protection capabilities where required to meet protection, selective coordination and arc flash reduction requirements.
   - 1.2 All moulded case circuit breaker selection shall be based upon the Short Circuit, Coordination and Arc Flash Study as identified in Section 19.4.2.

6.5 Neutral Grounding Resistors

1. General Requirements
   - 1.1 All NGRs shall have an appropriate protection relay and be monitored locally (ammeter) and by the control system.
2. High Resistance Grounding
   - 2.1 The NGR shall be designed to be placed outdoors and use wire wound resistance elements.
   - 2.2 The NGR shall be rated for continuous duty.
3. Low Resistance Grounding
   - 3.1 The NGR shall be designed to be placed outdoors and use edge wound stainless steel resistance elements. It shall be designed to trip within 1 second on sensing a Ground fault.
   - 3.2 All downstream ground fault protection relays shall be coordinated to trip faster than NGR protection relay.
   - 3.3 NGR time ratings shall be appropriate for the application.
4. Refer to Section 10.5 for ground fault detection system requirements.

6.6 Panelboards

1. All breakers are to be bolt-on type.
2. Surface mounted panelboards are preferred over flush mounted panelboards in industrial style occupancies.

3. Except as noted in Subclause 3.1 below, utilize separate process panelboards from panelboards dedicated for building systems, each powered by separate transformers.
   3.1 Common process and building system panelboards may be utilized where the number of building circuits or process circuits will be less than eight, and there will be no operational or maintenance issues associated with the circuits being on a common panelboard.
4. Segregate loads such as those that generate high harmonics on a separate panelboard fed from a dedicated transformer.
5. Where 347V lighting is utilized, provide a dedicated 347/600 V panelboard powered by a transformer to generate the required neutral.
6. Provide a minimum of 20% spare 15A breakers (or 5 breakers, whichever is less).
7. DC panelboard shall be suitable for 125 V DC power and shall be rated either 125 V/250 V DC, 12/24 way distribution with individual DC rated circuit breakers. AC circuit breakers with equivalent DC rating are also acceptable.

6.7 Receptacles

6.7.1 General

1. Arrange receptacles in accessible locations, considering operational and maintenance requirements.
2. Ensure that the voltage drop is minimized such the maximum voltage drop at the receptacle utilization point is 3% below nominal voltage, under system full load.
3. Receptacles shall be coloured as per **Error! Reference source not found.**

Table 6-3 : Receptacle Colours

Color	Application
White	General use – Offices, control rooms, and similar spaces
Grey	General use – Process areas, maintenance / shop areas
Orange	Powered by Process UPS
Blue	
Yellow	Powered by Lighting UPS
Red	Dedicated branch backed up by a generator and not load-shed. See Note 1.

Note:

1. Where standby generator can power the main power distribution, only the receptacles always designated to be powered by the generators should be colored red.

6.7.2 Welding Receptacles

1. Provide 600 V, three-phase welding receptacles in areas where mechanical equipment will be maintained and where welding may be required. Welding receptacles will be 600 V, 3 Ø, 60 A with integral disconnect switch.
2. Supply a maximum of two welding receptacles from each feeder breaker.
3. Coordinate to ensure only a single receptacle type is provided for each facility.
4. Mount welding receptacles at 1.2 m.

6.7.3 Convenience Receptacles

1. Convenience receptacles are those allocated for undefined, general purpose use of facility occupants.
2. Convenience receptacles will be duplex 5-15 R, 120 V, 1-phase. Appropriate rated receptacles will be utilized in hazardous locations.
3. Locate convenience receptacles to include at minimum:
   - 3.1 Automation rooms: Every 3 m of wall space not completely blocked by equipment and on columns as required such that the entire space can be reached via a 3 m extension cord.
   - 3.2 Electrical rooms: Every 3 m of wall space not completely blocked by equipment and on columns as required such that the entire space can be reached via a 3 m extension cord.
   - 3.3 Control rooms: Every 2 m of wall space and at every workstation, desk, or other location where a convenience load may be required.
   - 3.4 Janitor rooms: Every 3 m of wall space.
   - 3.5 Mechanical rooms: Every 4 m of wall space and on columns as required such that the entire space can be reached via a 4 m extension cord.
   - 3.6 Server room: Every 2 m of wall space.
   - 3.7 Process areas (indoor and outdoor): Every 30 m of wall or walkway space.
   - 3.8 Other spaces: Every 6 m of wall space
   - 3.9 Areas within 7.5m of equipment requiring maintenance;
4. Limit the number of convenience receptacles on each circuit to a maximum of six duplex receptacles; however, ensure that receptacles that are likely to be simultaneously loaded are on separate circuits.
5. GFCI receptacles shall be provided for:
   - 5.1 All locations where required by the Canadian Electrical Code.
   - 5.2 All outdoor locations.
   - 5.3 All wet locations.
   - 5.4 All receptacles located below grade in a wastewater lift, flood station or wastewater treatment process area.

6.7.4 Maintenance Receptacles

1. Maintenance receptacles are those allocated for maintenance (and possible housekeeping) use.
2. Maintenance receptacles will be duplex 5-20R, 120 V, 1-phase and GFCI protected, except appropriate rated receptacles will be utilized in hazardous locations.
3. Locate maintenance receptacles in all indoor locations such that all floor areas can be reached with a 30 m extension cord.
4. Limit the number of maintenance receptacles on each circuit to a maximum of ten duplex receptacles; however ensure that receptacles that are likely to be simultaneously loaded are on separate circuits.
5.

6.7.5 Dedicated Purpose Receptacles

2. Utilize locking-type receptacles where:
   - 2.1 the receptacle or the connected device is subject to vibration; or
   - 2.2 the load is of high importance, including UPS, sump pumps, control equipment and emergency lighting.
3. Ensure dedicated purpose receptacles are on independent circuits, unless it can be clearly demonstrated that the loads are similar, and there will be no operational or maintenance impact through the use of a common circuit.

6.8 Soft Starters

6.8.1 Design Requirements

1. Short circuit withstand rating based on fault level calculations at the point of connections. In some cases, upstream fuses may be required to address the expected short circuits.
2. The 600 V soft starter shall be rated and designed for starting method to be compatible with motor starting characteristics. It shall be verified that the maximum torque developed by the soft starter exceeds the starting torque required by the load at standstill.
3. The soft starter shall be equipped with all the required motor protection functions.
4. Where installed in an intelligent MCC, the starter shall be equipped with a communication interface compatible with the intelligent MCC communications.
5. The soft starter shall be equipped with a programming and display keypad unit, which shall be front door mounted.
6. Adequate cooling shall be provided by integral fans or enclosure mounted fans to transfer the heat from soft starter to outside. A heat loading calculation shall be performed for all custom enclosures.
7. Under no condition may the SCRs be utilized for continuous operation of a motor, regardless of manufacturer’s claims. Internal bypass contactors however are acceptable under certain applications, as per Table 6-4.

8. Where external contactors are utilized, IEC contactors shall only be acceptable in applications where internal bypass contactors are acceptable, as per Table 6-4. All other applications shall utilize appropriately rated NEMA contactors. An exemption may be granted in certain applications, with approval by the City, where the available space does not allow for installation of a NEMA contactor.

9. Where an External Bypass Starter is required, as per Table 6-4, the overload shall be on the bypass line, and of an electronic type. The bypass starter shall be utilized when the motor is up to speed. Provide a "Soft Start / Bypass selector" switch on the front of the starter, and monitor the switch from the control system. The external bypass starter must be capable of performing a full voltage, across the line start if the soft starter fails.

10. Several models of soft starters are available with an internal bypass contactor that closes once the motor is up to speed. Use of the internal bypass contactor is only permitted for applications as indicated in Table 6-4.

Table 6-4 : Soft Starter Application Requirements

Facility Type	Application	Internal Bypass Acceptable	External Bypass Starter Required	Line Isolation Contactors Required	Load Isolation Contactors Required	Notes
Wastewater Flood Station	Flood Pump	Yes	No	Yes (1)	No	
Wastewater Lift Station	Lift Pump	No	Yes	Yes (1)	No (2)	
Wastewater Treatment Facility	Raw Sewage Pump	No	TBD	TBD	TBD	Review on a case-by-case basis.
	Process Pump	TBD	TBD	No	No	Review on a case-by-case basis.
	Ventilation / HVAC	Yes	No	No	No	
	Misc. Other	Yes	No	No	No	
Water Pumping Station	HVAC	Yes	No	No	No	
Other	Other	TBD	TBD	TBD	TBD	Review on a case-by-case basis.

Notes:

1. In certain applications where space does not permit, the City may grant an exemption to the requirement for isolation contactors.

2. For wastewater lift stations, a load contactor shall be provided where it is required in order to implement the automatic bypass starter.

6.8.2 Bypass Starters

1. Bypass across-the-line (ATL) motor starting method to be used for very critical pumping loads required to be kept in operation upon a failure of the soft starter.
2. Ensure that the mechanical equipment and power system can handle the hard across the line start method via the bypass starter. If this is not technically feasible then a redundant soft starter may be required.
3. The bypass starter shall be designed for continuous operation with motor loads when its associated soft starter is unavailable.
4. The bypass starter components shall be NEMA rated. IEC components are not acceptable.
5. Bypass mode is to be selected via a door-mounted two-position selector switch.
6. The bypass starter must be operable with the soft-starter removed. Ideally this would require no re-wiring; however for Schneider ATS48 installation it is acceptable to require minor power re-wiring to effect the removal of the soft starter.
    - 6.1 Where re-wiring is required to allow the bypass starter to operate without the soft starter in place, provide permanent diagrams and clear warnings on the starter door interior guiding maintenance personnel on the wiring for each configuration. Ensure that the motor starter schematics also provide a clear wiring diagram for each mode.
    - 6.2 With the soft starter in place, the bypass starter shall be operable by simply switching the *Soft Start/Bypass* switch on the door exterior into the *Bypass* position, without any rewiring.

6.8.3 Supervisory Monitoring and Control

1. Soft starter operating modes and status signals are to be monitored by the automation system and displayed on the SCADA HMI. Typical monitored points include:
    - 1.1 Ready Status
    - 1.2 Running Status
    - 1.3 Soft Starter Fault Status
    - 1.4 Bypass Starter O/L Trip Status
    - 1.5 Soft Starter/Bypass Mode, monitored directly from the selector switch
    - 1.6 Remote/Local Mode, monitored directly from the selector switch
    - 1.7 Motor Current
2. Fault signals should be wired to a non-fail safe contact (normally open, closed upon a fault condition) to avoid fault alarms from appearing on the HMI when the soft starter is disconnected from the power source for maintenance purposes.

6.9 Switchgear – Low Voltage

1. Switchgear connected directly to utility services must be service entrance rated.
2. Instrument Transformers
    - 2.1 Instrument transformers shall have a thermal rating of 2.0 and include all the current transformers (CT's) and potential transformers (PT's) required for both metering and protection purposes.
    - 2.2 Current transformers shall be mounted in the breaker compartment around the stationary main contacts and shall have their thermal and mechanical rating capable

of withstanding the short circuit rating of the associated circuit breakers. They shall be accessible from the front of the switchgear assembly. There shall be one CT per phase.

2.3 The metering accuracy of the CT's shall be 0.3 B-0.2 as a minimum. Burden factor of 0.2 Ω shall be increased to higher values as needed for the application. For protection duty, sensors' accuracy class shall not be less than C100, and shall be increased as required by the application to comply with Class C. CT's used for metering and protection shall fulfill the accuracy requirements for both duties.

2.4 Potential transformers with their primary and secondary fuses shall be mounted inside the switchgear's instrument compartment. Accuracy shall be 0.3WX0.6Y1.2Z, as a minimum. The fuses shall be of the pull out type.

2.5 Potential transformers shall be connected in open delta with their secondaries at 120 V.

2.6 Current and potential transformers shall be wired to test blocks. Whenever an instrument transformer is connected to more than one device, there shall be one test block for every device. Potential transformers shall be grounded at the input side of the test block.

3. Controls

3.1 Control potential transformer with pull-out type primary (two fuses) and secondary fuse shall be mounted inside the switchgear instrument compartment.

3.2 Control and timing relays shall be of the plug-in type. Timing relays shall be solid state.

4. Communication

4.1 Review the requirement for Ethernet communication of relays and metering devices on a case-by-case basis.

5. Power Connections

5.1 Two-hole, long barrel, tin-plated, copper, NEMA standard spacing compression type lugs and cable support brackets for the incoming and outgoing cables.

5.2 Where an incoming bus duct is specified, suitable flanges shall be provided.

5.3 Provide removable conductive gland plate (non-magnetic and non-conductive for single conductors).

6. Control Wiring

6.1 Control wiring shall be 14 AWG minimum, single conductor, stranded copper having 600 volt, flame retardant insulation, SIS switchboard type.

6.2 Current transformer wiring shall be 10 AWG minimum, single conductor, stranded copper having 600 volt, flame retardant insulation, SIS switchboard type wiring.

6.3 All external connections shall be via terminal blocks. Provide a minimum of 15% spare terminals.

7. Provide closed-door racking for all low-voltage switchgear.

8. Provide arc-resistant switchgear or remote racking for switchgear with arc flash ratings exceeding 25 cal/cm^2 to limit the potential exposure of maintenance personnel performing racking operations.

9. Provide thermographic inspection windows in low voltage switchgear with an arc flash rating greater than 8 cal/cm^2.

10. Clearances

10.1 Provide sufficient working space in front of medium voltage switchgear to allow for all draw-out racking operations to be comfortably carried out by maintenance personnel. At a minimum provide 1.5m front clearance, in addition to space required for drawout equipment in the full disconnect position.

6.10 Switchgear – Medium Voltage

1. Switchgear connected directly to utility services must be service entrance rated.
2. The main incoming service for facilities requiring medium voltage switchgear shall be metal-clad circuit breaker switchgear.
3. Fuse-based medium voltage switchgear is only acceptable in the following scenarios:
   - 3.1 Systems without neutral-grounding resistors;
   - 3.2 Capacity is less than 2 MVA;
   - 3.3 Arc flash hazards are not increased by the use of a fuse based installation;
   - 3.4 Protection is provided to prevent the occurrence of a loss of a phase to loads; and
   - 3.5 Selective coordination is not lost.
4. Circuit breakers shall be vacuum circuit breakers.
5. Utilize 125 VDC switchgear control power for all installations, except as follows:
   - 5.1 AC control power may be utilized for installations less than 4 MVA, and requires provision of a dedicated UPS or capacitor trip supply.
6. At minimum, provide arc-resistant switchgear where the arc flash category level for the switchgear is above Category 2. Under no circumstances shall protection settings be set in a manner to reduce arc flash energies for the purpose of bypassing this requirement, if the reduced protection settings impact selective coordination or in any other way impact operation or maintenance.
7. Where arc resistant switchgear is provided:
   - 7.1 The standard of acceptance shall be ANSI/IEEE C37.20.7 Type 2B; and
   - 7.2 Ensure that the maximum fault clearing time is within the switchgear design limits (typically 0.5 second).
8. Protection and metering shall be microprocessor based with integrated digital metering and display, as well as communications capability for remote display via the control system.
9. See Section 10.4 for protection requirements.
10. Provide at minimum the following signals to the control system for monitoring and alarming:
    - 10.1 Closed / open status of main and tie breakers.
    - 10.2 Breaker / Relay fail status.
    - 10.3 Metering signals as per Section 9.2.
11. Provide closed-door racking for all medium-voltage switchgear.
12. Consider the use of light-based arc detection protection relays to reduce arc flash energies.
13. Utilize remote racking for switchgear with arc flash ratings exceeding Category 3, where maintenance personnel are not otherwise protected by arc-resistant switchgear.
14. Ensure viewing windows are provided to visually monitor the position of disconnect blades in switch style switchgear.

15. Provide thermographic inspection windows in all medium voltage switchgear.

16. Clearances

    16.1 Provide sufficient working space in front of medium voltage switchgear to allow for all draw-out racking operations to be comfortably carried out by maintenance personnel. At a minimum provide 1.5m front clearance, in addition to space required for drawout equipment in the full disconnect position.

    16.2 Provide a minimum of 1 m clearance at the rear of the switchgear. Increase clearance in accordance with CSA 22.1 Table 56 as necessary.

    16.3 Provide a minimum of 1 m of clearance on the sides with radius around corners expanding to required clearances in the front and rear of the switchgear.

6.11 Transformers

1. General

    1.1 Provide 25% spare capacity for future use, except as follows:

        a) Where a dedicated electrical distribution is provided to power selected process loads in accordance with Section 3.7; or

        b) Where future loads are not expected and the City has approved the reduction of the spare capacity in writing.

    1.2 Percent Impedance (%Z) in accordance with CSA and design requirements.

    1.3 Copper windings only.

    1.4 All three phase transformers to be delta-wye unless otherwise approved by the City.

    1.5 Specify the relevant CSA standards for each transformer installation.

2. Sizing

    2.1 Ensure sizing is in accordance with Section 3.7.

    2.2 Ensure all transformer sizing is coordinated with generator sizing to allow the generator(s) to energize the transformer (considering maximum inrush current) without complicated start-up schemes.

    2.3 Limit the size of transformers in accordance with Table 6-5. Utilize separate transformers and secondary distribution systems where the size of the transformer is exceeded.

Table 6-5 : Maximum Transformer Size

Secondary Voltage	Maximum Size (KVA)		
	Distribution		Service
	Recommended	Absolute	Recommended
240/120 V, 1Ø	50	75	30
208/120 V, 3Ø	75	150	50
480 V, 3Ø	1500	2000	2000
600 V, 3Ø	2000	2500	2500
4160 V, 3Ø	5000	5000	5000
12.47 kV, 3Ø	Note 1	Note 1	Note 1

Notes:

1. TBD

3. Outdoor, liquid-filled transformers

3.1 Efficiency in accordance with:

3.1.1 CAN/CSA C802.1 – Minimum Efficiency Values for Liquid-Filled Distribution Transformers

3.1.2 CAN/CSA C802.3 - Maximum Losses for Power Transformers

3.2 Secondary neutral terminal bushing is required. The neutral must be fully rated for all neutral grounding resistor applications.

3.3 Provide surge arrestors on the primary side of the transformer.

3.4 The NGR enclosure shall be stainless steel and NEMA 3-R rated.

3.5 Primary terminal bushings shall be suitable for cable connections.

3.6 Secondary terminals for connecting secondary cables or cable bus duct / bus way shall be tinned copper bus bars.

3.7 Utilize PCB free transformer oil suitable for Arctic conditions (extreme cold climate).

3.8 The transformer core shall be cold rolled grain oriented steel laminations.

3.9 Transformer shall withstand thermally and mechanically a two second short circuit at its secondary terminals.

3.10 Transformer shall be equipped with all standard metering, pressure relief and CTs as required by CSA.

3.11 Transformer shall be provided with stainless steel grounding pads at two diagonally opposite ends.

3.12 Transformer shall be equipped with oil fill, drain and sample valves.

3.13 Transformer shall be equipped with an oil level monitoring gauge with alarm contacts.

3.14 Transformer shall be equipped with a de-energized tap changer on the primary winding. The tap changer should be functional to -40°C ambient temperature operation. At minimum two taps above and two taps below at 2.5% increments shall be provided. All taps shall be full capacity.

3.15 Where Transformer connections are enclosed in junction boxes provide window for infrared thermography. Not applicable to pad-mount transformers.

3.16 Protection Requirements – Provide at minimum:

3.16.1 Primary and secondary overcurrent protection.

3.16.2 Winding temperature indicator with alarm and trip contacts.

3.16.3 Sudden pressure relay for sealed-tank design transformers.

3.16.4 Vacuum/pressure gauge for sealed-tank design transformers.

3.16.5 Provide differential protection for transformers as per Section 10.4.

3.17 Power transformers, >= 35 kV or >= 10 MVA:

3.17.1 Windings shall be disc type and not layer type.

3.17.2 Provide transformer demising partition walls between liquid-filled transformers that are in proximity to each other such as to affect the other during extreme events.

3.18 Provide a load-tap changer (LTC) where specified or required to provide acceptable voltage regulation.

3.19 Additional transformer protection is appropriate for many applications, especially for larger transformers. Apply protection in accordance with good engineering design practice.

4. Dry-Type Transformers

4.1 All indoor transformers shall be dry type unless otherwise specified or approved by the City.

4.2 Enclosure: NEMA 1 is typical. Specify NEMA 2 drip-proof or sprinkler-proof enclosure or NEMA 3R where required.

4.3 Efficiency in accordance with:

4.3.1 CSA C802.2 – Minimum Efficiency Values for Dry-Type Distribution Transformers

4.4 Ensure adequate space for ventilation is provided.

4.5 Provide at minimum two taps above and two taps below at 2.5% increments, full capacity.

4.6 Protection Requirements – Provide at minimum:

4.6.1 Primary and secondary overcurrent protection.

4.6.2 Winding temperature indicator with one probe in the center winding, with alarm and trip contacts for transformers >= 150 kVA.

4.6.3 For transformers >= 1000 kVA, provide a digital temperature monitoring unit with one probe in each winding, giving instantaneous temperature readings for each winding, average readings and maximum reading recorded. Unit shall provide three 120 Vac, 10 A, SPDT dry contacts for alarm and trip outputs. All contacts shall have an adjustable temperature setpoint.

4.7 Review the requirement for surge arrestors on the transformer primary terminals. Where applied, they shall comply with the requirements of Appendix B of CSA C9.

4.8 Review the requirement for K-rated transformers in harmonic environments.

4.9 Electrostatic shield between high voltage and low voltage windings, connected to the enclosure ground bar, except that the use of electrostatic shields shall be reviewed in high harmonic environments.

4.10 Ensure lifting hooks for lifting complete transformer assembly are provided.

4.11 Where required, neutral grounding resistors shall be made of stainless steel, completely protected by a hot dip galvanized enclosure, and mounted on top of the transformers.

4.12 The grounding resistors shall be insulated for the full line to line voltage and hot spot temperature rise, above 30°C ambient, shall be limited to 385°C for continuous rating, and 760°C for 1 minute rating, as per IEEE Standard No. 32.

4.13 Neutral connection shall be made with 2/0 AWG copper conductors (minimum), insulated for the transformer secondary line to line voltage. Colour of insulation shall be green.

4.14 Provision shall be made for field installation of NGR current transformer on live side of NGR.

4.15 Protection for three-phase delta-wye transformers:

4.15.1 Provide secondary overcurrent protection for all delta-wye transformer installations with a secondary breaker sized at 125% or less of the transformer full-load current. Note that secondary overload protection provides better delta-wye transformer protection than primary overload protection.

4.15.2 For primary voltages > 750 V, protection may be either by fuse or circuit breaker, as appropriate for the application.

a) Ensure appropriate protection is provided to address transformer inrush and potential short circuit currents.

b) Ensure selective coordination is provided.

c) Refer to Section 10.4 for other protection requirements.

4.15.3 For primary voltages < 750 V, provide primary overcurrent protection for all delta-wye transformer installations with a primary breaker sized between 150% and 300% of the transformer full-load current, taking into account:

4.15.3.1 Transformer inrush current

4.15.3.2 Selective coordination between upstream and downstream breakers.

4.15.3.3 Transformer short circuit protection.

6.12 Transient Voltage Surge Suppressors

1. Provide TVSS at each major point in the distribution connecting to load equipment. For example, all major MCCs should be equipped with a TVSS.

2. If TVSS units are utilized on resistance grounded systems, ensure that they are appropriately rated for potential overvoltages during a ground fault.

6.13 Unit Substations

1. The term “Unit Substation” shall be used to refer to a fully co-ordinated and pre-assembled power supply unit consisting of:

1.1 Primary switchgear; or feed through device with interrupting and isolating devices

1.2 Step-down transformer

1.3 Low voltage switchgear or cable termination compartment

1.4 All necessary instrument transformers, ground fault detection and protection devices, locally mounted.

2. All components of a unit substation shall be directly coupled and suitable for indoor use.

3. A feed through type switchgear or proper cable connection arrangement will be required if more than one unit substation will be connected from the same primary supply circuit (in daisy chain or loop configuration)
4. The low voltage section may be equipped for use as a single load feed or as a distribution board for multiple loads. Alternatively the low voltage switchgear required may be mounted within a short distance, in which case, a fully rated cable or bus-duct termination box shall be mounted directly on the secondary side of the transformer section.
5. The transformer section shall be fully enclosed and shall include all required instrument transformers, and monitoring devices pre-wired to the corresponding switchgear section or terminated in a separate junction box if external wiring is required.

6.14 Uninterruptible Power Supplies

There are many critical loads within water and wastewater facilities that require their power supply to remain available in the event of a utility power failure. Typically, an Uninterruptible Power Supply (UPS) is used to accomplish this.

6.14.1 Application Requirements

1. Uninterruptible power supplies are to be provided for process controls for all facilities. This shall be a dedicated UPS that does not serve other applications within the facility.
2. Uninterruptible power supplies may be utilized for provision of emergency lighting power where an emergency generator is not available or where no interruption of lighting is deemed to be acceptable, during the start of the generator.

6.14.2 Design Requirements

1. UPS Selection
   - 1.1 All AC UPS units shall be of the double-conversion (on-line) type.
   - 1.2 DC UPS units are acceptable for small loads, such as a single control panel. Required voltage is 24 VDC.
   - 1.3 In larger facilities, the UPS will be designed to be multiple standalone units. In these cases, UPS loads are distributed around the facility or process area and the UPS shall feed a standard panelboard for distribution of the UPS power.
2. Load Distribution
   - 2.1 Do not route UPS load cabling over long distances. Do not route parallel to other electrical cabling that could radiate harmonics or noise.
   - 2.2 Limit voltage drop from the UPS to the load to 3%.
   - 2.3 Provide selective coordination of the load breakers to the greatest extent possible. In some cases, this may require over-sizing the UPS.
   - 2.4 All load distribution wiring to be hard cabled. Where a UPS with hardwired connections is not available, a UPS with locking receptacles may be utilized. UPS units with non-locking receptacles are not permitted.
3. Bypass Requirements
   - 3.1 All 208/120 V UPS units shall be provided with an external maintenance bypass switch to allow for removal of the UPS unit.

6.14.3 Redundancy

1. UPS redundancy is typically only required for only the most critical loads. Note that paralleling UPS units to achieve a larger capacity does provide a level of redundancy.
2. Use of paralleled UPS units with a synchronized common distribution system is not a preferred redundancy solution, due to the following considerations:
   - 2.1 There are still single points of failure in the UPS load distribution system.
   - 2.2 Maintenance or modifications to the UPS load distribution system requires all UPS powered loads to be de-energized.
   - 2.3 If a common power source is provided to both UPS units, any maintenance or extended downtime on the upstream power supply for durations longer than the battery backup time would require that the UPS powered loads be de-energized.
3. If UPS redundancy is required, preferred solutions include:
   - 3.1 Distribution of critical loads across multiple UPS units such that a single UPS failure will not affect all critical loads. This is typically a good solution where parallel process trains are utilized.
   - 3.2 Utilizing load equipment that support multiple power supplies (dual corded equipment), such that each power supply can be connected to a different UPS.

6.14.4 Sizing Factors

1. The inverter must be capable of supplying power to the load under typical and peak conditions. Peak load inrush conditions are typical during equipment start-up, and can be significantly higher than the measured loads.
2. Other factors to be considered in sizing the UPS units are:
   - 2.1 Crest factor of the load. This accounts for the fact that switching mode power supplies may not draw current in a typical sinusoidal fashion, and that the peak cycle current may be significantly higher than the normal crest factor of 1.414 of a clean alternating current cycle. Utilize a crest factor of 2.4 in sizing of UPS units that primarily feed switching mode power supplies.
   - 2.2 Inrush of load transformers (on initial power-up). This inrush can be very high, and can potentially be addressed by starting the UPS up in bypass mode.
   - 2.3 Fault clearing capability of the UPS and its internal bypass line.
   - 2.4 Selective coordination of the upstream UPS protection and load circuit breakers.
   - 2.5 Whether the load is connected single or three-phase, and whether there is an isolation transformer present.
3. Include the following in battery runtime calculations:
   - 3.1 Age derating of the batteries. IEEE standards recommend replacing batteries when the measured capacity drops below 80%. Thus, it is recommended that the batteries are derated by 80% when determining the runtime of batteries, to account for end of life capacity.
   - 3.2 Include any losses in any isolation transformers that may be present.
   - 3.3 If there is potential for the UPS environment to become cold in the event of a power failure, it is recommended to de-rate the batteries by 80% to account for a reduced building temperature.
   - 3.4 Ensure that the rate of discharge is accounted for in the runtime calculations. Lead-acid battery capacity is dependent upon the discharge rate.

3.5 Provide a minimum of 20% spare capacity.

6.14.5 Battery Runtimes

Battery runtimes for each application shall be discussed with the City and documented. Minimum requirements are shown in Table 6-6.

Table 6-6 : Minimum UPS Runtime Requirements

Facility Type	Application	Standby Generator	Minimum Runtime (min)	Notes
Wastewater Lift Station	Control System	N	60	
		S	30	
		R	15	
Wastewater Flood Station	Control System	N	60	
Wastewater Treatment Facility	Control System	N	120	
		S	60	
		R	30	
Regional Water Pumping Stations	Control System	R	120	
Secondary Water Pumping Stations (Tache/Deacon)	Control System	N	600	
		S	60	
Water Treatment Plant	Control System	R	30	
Shoal Lake Aqueduct	Control System	S	720	Due to remote nature of facility.

Legend for Standby Generator Column:
N No Standby Generation
S Single Standby Generator or Generator System with No Redundancy
R Standby Generation with Generator Redundancy

6.14.6 Other Design Requirements

1. Power Supply
   - 1.1 Where a standby generator is available, the UPS power supply shall be powered from the standby generator.
   - 1.2 Address the potential harmonics associated with the UPS input current, and the associated effect on standby generators.
2. Location
   - 2.1 Locate all UPS units above grade.
3. Environmental
   - 3.1 The optimum temperature for UPS batteries is 22°C + /- 5°C, and it should be noted that the temperature inside the UPS battery module/cabinet, may be higher than the

typical room temperature. This is not expected to be a significant issue for the installations present. The optimum relative humidity is 35 to 55%.

4. Ventilation

4.1 Lead-acid batteries produce hydrogen gas. Valve Regulated Lead Acid (VRLA) batteries are sealed, such that the hydrogen gas recombines into water inside the battery. However, under certain fault conditions, the hydrogen gas may build up faster than it can be recombined, and a safety valve opens to vent the excess hydrogen. For most UPS installations with VRLA batteries, normal building ventilation rates are typically above that required to disperse the hydrogen gas of VRLA batteries. However, if the UPS batteries are contained within a small room or enclosure, review of the required ventilation is required.

6.15 Variable Frequency Drives

6.15.1 General

1. Voltage of VFD drives shall be as per Table 6-7.

Table 6-7 : VFD Voltage and Type Requirements

Motor Power	**Maximum Motor / VFD Voltage**	**Minimum VFD Pulse** (See Note 1)	**Notes**
< 224 kW (300 hp)	600 V 3Ø	6	Small motors < 0.37 kW may be 120 V 1Ø
>= 224 kW (300 hp) and < 261 kW (350 hp)	600 V 3Ø or 4160 V 3Ø	12	Dependant on application
> 261 kW (350 hp)	4160 V 3Ø	24	

Notes:

1. The minimum VFD pulse does not eliminate the requirement to meet Section 3.10 regarding harmonics, which may require a higher pulse count VFD.
2. Limit the length of VFD driven motor cables in accordance with Table 6-8.

Table 6-8 : Maximum VFD Motor Cable Length

Motor Power	Maximum Motor / VFD Voltage	Maximum Length		
		Normal Cases	Abnormal Cases (See Note 2)	Special Case With City Approval (See Note 3)
< 224 kW (300 hp)	600 V 3Ø	100 m	150 m	200 m
>= 224 kW (300 hp) and < 261 kW (350 hp)	600 V 3Ø or 4160 V 3Ø	80 m	100 m	125 m
> 261 kW (350 hp)	4160 V 3Ø	75 m	100 m	125 m

Notes:

1. Do not assume that no harmonic or voltage mitigation is required for VFD motor cables less than or up to the indicated maximum length.
2. The length indicated for abnormal cases shall only be utilized for a limited number of motors where other practical alternatives do not exist. For example, a single VFD driven motor in a remote location could be classified as an abnormal case; however, a set of six 200 hp process pumps 145 m away from an electrical room would not be an abnormal case.
3. Special City approval shall only be utilized where it is demonstrated and clear that alternatives are not economically viable from a lifecycle cost alternative, and all appropriate filtering and other mitigation to address the long length is implemented.

6.15.2 Medium Voltage (4160 V) VFD Requirements

1. The VFD rated output current should exceed the motor nameplate current, irrespective of the motor power and VFD power ratings not being matched.
2. Short circuit withstand rating based on fault level calculations at the point of connections.
3. Use surge arrestors at line terminals if VFD BIL rating is inadequate to meet system BIL requirements.
4. The VFD shall be minimum 24 pulse or optionally utilize an active front end.
5. The VFD controller shall be rated and designed for starting method to be compatible with motor starting characteristics. Motor RPM encoder is not required.
6. VFD shall be programmable for V/F as well as sensorless vector control in the field. User can choose either based on field conditions.
7. The VFD shall comply with IEEE-519 harmonic requirements at its Line terminals.
8. The VFD shall be equipped with a network communication interface to convey status monitoring and control commands from external Control system.
9. All VFD power control components shall be CSA approved or cUL listed. IEC components are not acceptable.

10. Use integral primary isolation transformer to reduce short circuit fault levels on the VFD side, and also to reduce the Common Mode Voltages developed in the Inverter Bridge.

11. The VFD inverter shall be minimum three levels, and shall use Pulse width modulation (PWM) technique for voltage synthesis.

12. The system designer in coordination with the manufacturer is to review potential resonance effects and address any issues at design time.

6.15.3 Low Voltage (600 V) VFD Requirements

2. Select the VFD manufacturer based upon the City's standard, for motors rated less than 75 kW (< 100 hp). Specialized applications may deviate from this standard.

3. Adequate cooling shall be provided by integral fans or enclosure mounted fans to transfer the heat from the VFD to outside. A heat loading calculation shall be performed for all custom panels.

1. Confirm that the building ventilation and cooling is adequate for the VFD heat loading.

2. Ensure that corrosive gases are not present in the VFD cooling air.

3. The system designer must review the harmonic impact of the VFD on the power supply.

4. At a minimum, utilize a line reactor on the line side of all VFDs to reduce inrush currents and the level of harmonics. Line reactors can also protect the VFD against some power line disturbances. The selection of the appropriate reactor is to be based upon harmonics and voltage analysis.

    4.1 Line reactors shall be provided for all VFDs, regardless of size, unless it can be clearly demonstrated that they do not provide a benefit and approval of the City is provided.

5. Load reactors are utilized to protect the motor if the wiring distance between the VFD and motor is long.

    5.1 The appropriate selection of an appropriate load reactor is beyond the scope of this guide, and the application details should be reviewed in each case, however the following is provided as "rule-of-thumb" general guidance:

        a) Load reactors are recommended for motors greater than 37 kW (50 hp) to reduce motor temperatures and increase motor life.

        b) Load reactors are recommended when motor leads exceed 30m.

        c) Load reactors are mandatory when motor leads exceed 100m.

        d) Filters (dv/dt) are required when motor leads exceed 150m.

6. Utilize inverter rated cabling for all six-pulse VFD load cabling, with three copper grounding conductors, 1000 V rated insulation, continuous copper tape shield with 50% overlap or continuous (non-interlocked) aluminum armour, and approved for six-pulse VFD use.

6.15.4 Bypass Starters

1. 60Hz AC operation with Across the Line (ATL) motor starting method to be used for very critical pumping loads required to be kept in operation upon a failure of the main motor controller.

2. Ensure that the mechanical equipment and power system can handle the hard across the line start method via the bypass starter. If this is not technically feasible then a Reduced Voltage bypass starter or a soft-start bypass starter may be utilized instead of the conventional ATL bypass starter.

3. The bypass starter shall be equipped with its own motor protection relay as the motor protections inside VFD would be unavailable.
4. The bypass starter components shall be NEMA rated. IEC components are not acceptable.
5. The bypass starter shall be interlocked with the VFD such that at any time only one can operate.
6. A zero speed switch or a suitable time delay relay will be used to prevent a bypass starter from closing power on a rotating motor.
7. Provide isolation disconnects / and contactors on VFD load side to prevent power back-feed into the VFD inverter module when the VFD is not running.
8. Bypass mode is to be selected via a door-mounted two-position selector switch.

6.15.5 Supervisory Monitoring and Control

1. VFD operating modes and status signals are to be monitored by the automation system and displayed on the HMI. Typical monitored points include:
   - 1.1 Ready Status
   - 1.2 Running Status
   - 1.3 VFD Fault Status
   - 1.4 Bypass Starter O/L Trip Status (if applicable)
   - 1.5 VFD/Bypass Mode, monitored directly from the selector switch (if applicable)
   - 1.6 Auto/Manual Mode, monitored directly from the selector switch
   - 1.7 Motor Current
2. The VFD/Bypass mode is typically controlled via a door-mounted selector switch on the VFD panel. However, for critical applications where maintenance personnel are not able to reach the facility in a reasonable amount of time, selection of the Bypass mode may be made from the HMI system.
3. Fault signals should be wired to a non-fail safe contact (normally open, closed upon a fault condition) to avoid fault alarms from appearing on the HMI when the VFD is disconnected from the power source for maintenance purposes.

6.15.6 Functional Requirements

1. Wastewater Pumping (Lift) Stations
   - 1.1 VFDs used in wastewater pumping (lift) stations should operate such that upon a start command, the VFD ramps up from zero speed to a minimum operating speed, which corresponds with the minimum scouring velocity of the force main. After reaching minimum speed, the speed command to the VFD can be PID controlled to maintain the setpoint level in the wet well. The VFD shall not be allowed to operate below the minimum operating speed; otherwise solids will settle out of the wastewater, which may plug the force main over time. Upon receiving a stop signal, the VFD shall ramp down in speed, rather than coast, to reduce equipment and pipe stresses.
   - 1.2 Typical lift stations contain multiple pumps that discharge to a common header or force main. When multiple VFD driven pumps are in operation at one time, the commanded speed to all of the pumps is to be identical, provided the pumps are matched. If one of several pumps is operating in bypass mode (and therefore running at full speed) then the other VFDs shall be commanded to run at full speed when they are called to start.

1.3 Provide local manual speed control by means of a door-mounted potentiometer on the VFD panel.

7 MOTORS

7.1 General Requirements

1. General Requirements for all motors
   - 1.1 All motors are to have a service factor of 1.15 under normal full voltage operation.
   - 1.2 Operating Temp Class B (130°C)
   - 1.3 Insulation Class F
   - 1.4 Terminal boxes rated NEMA 4.
   - 1.5 Motors must meet or exceed the efficiencies outlined in either Table 2 (energy efficient) or Table 3 (premium efficiency) of CAN/CSA C390-10, depending on their design.
2. General Duty motors for non-process equipment are to have the following requirements:
   - 2.1 TEFC enclosures.
3. Process motor requirements include:
   - 3.1 TEFC enclosures.
   - 3.2 Suitable for moist and corrosive locations.
4. Motors for use with a variable frequency drive:
   - 4.1 TEFC enclosures.
   - 4.2 Suitable for moist and corrosive locations.
   - 4.3 Inverter duty rated, in conformance with NEMA MG1.
   - 4.4 Ensure that the driven load is not rated at more than 85% of the motor's effective service rating.
   - 4.5 Ensure motors have adequate cooling over the operating speed range.
   - 4.6 Motors larger than 150 kW (200 hp) shall have an insulated bearing on the non-driven end (NDE) when driven by VFD.
5. Explosion-proof motor requirements include:
   - 5.1 Rated for Class I, Zone 1 (or Div. 1) as applicable.
   - 5.2 Provide an approved breather / drain device at the motor drain hole.

7.2 Motor Voltage Levels

1. The acceptable motor power for each voltage level is shown in Table 7-1.

Table 7-1 : Acceptable Motor Voltage Levels

System Voltage Level	Motor Voltage Level	Minimum	Preferred Low	Preferred High	Maximum
120 V 1Ø	115 V 1Ø	-	-	0.37 kW (½ hp)	3.7 kW (5 hp)
240 V 1Ø	230 V 1Ø	-	-	0.37 kW (½ hp)	7.5 kW (10 hp)
208 V 3Ø	200 V 3Ø	-	-	0.75 kW (1 hp)	37 kW (50 hp)
600 V 3Ø	575 V 3Ø	-	0.37 kW (½ hp)	261 kW (350 hp)	556 kW (750 hp)
4160 V 3Ø	4000 V 3Ø	75 kW (100 hp)	261 kW (350 hp)	1492 kW (2000 hp)	5595 kW (7500 hp)

Notes:

1. For motor sizes outside of the preferred ranges the designer shall submit to the City a clear rationale, with analysis as appropriate, justifying the deviation from the preferred range.
2. Motor sizes outside of the preferred ranges require specific acceptance by the City.
2. Three-phase motors are preferred over single-phase motors.
3. Utilize higher voltage motors where the higher voltage is available.

7.3 Special Requirements

1. The use of oversized terminal boxes is desirable. Size of power cable will have an influence on the size of the terminal box and must be taken into account. Terminal boxes must be accessible for the connection and disconnection of motors without dismantling or removing nearby equipment.
2. Motor winding temperature protection should generally be provided for motors 75 kW (100 hp) and above. Provide RTD Winding Temperature Detectors embedded in the stator for motors above 150 kW (200 hp). Provide a dedicated terminal box separate from the motor box for termination of the RTD leads. Motors less than 150 kW (200 hp) may utilize thermistors.
3. Specify motors equipped with anti-condensation heaters in the following cases:
   - 3.1 Medium voltage motors
   - 3.2 Low voltage motor above 37 kW (50 hp), where the motors could potentially not be operating for a significant period of time in an area with high humidity.

7.4 Acceptable Methods of Control

1. The following methods of control are deemed to be acceptable, as per application requirements. Other methods of control require specific approval of the City.
   - 1.1 Full Voltage Direct On Line (DOL) - Fixed speed
   - 1.2 Soft Start – Fixed speed
   - 1.3 Variable Frequency Drive (VFD) – Variable speed
   - 1.4 DC Electrically Commutated.
2. The use of magnetic couplings or eddy current drives may be acceptable for certain applications where the variable speed requirements are limited (~85% - 100% speed). Review would be required on a case-by-case basis.
3. Contactors
   - 3.1 All full voltage motor starter contactors shall be NEMA rated contactors.
   - 3.2 NEMA labelled IEC style contactors are acceptable for most applications.
   - 3.3 IEC style contactors are permitted for the following applications:
     - a) Soft starter isolation contactors.
     - b) Soft starter bypass contactors provided the bypass contactor is not utilized for full voltage starting.
   - 3.4 For applications in wastewater collections, wastewater flood pumping, or land drainage, where IEC contactors are utilized for bypass or isolation purposes, they shall, at minimum, be sized as follows:
     - a) One size larger than required, or
     - b) 125% of FLA.
4. Typical special motor control requirements are as per Table 7-2; however the control of each motor shall be reviewed in light of the specific application requirements.
5. Most wastewater flood pumping stations have a special requirement in that the motors cannot be tested at full speed during a non-flood event as this would pump wastewater to the river. Thus, all applications where full speed testing cannot be performed must have a slow speed jog capability. The Allen-Bradley SMC-Flex series of soft starter is known to have this capability.

Table 7-2 : Typical Special Motor Control Requirements

Facility Type	Equipment	Rating	Motor Control
Underpass Pumping Station	Lift Pump – Single Speed	>= 18.7 kW (25 hp)	Soft Starter
Wastewater Lift Pumping Stations	Wastewater Lift Pumps – Single Speed	< 18.7 kW (25 hp)	Full Voltage Starter
		>= 18.7 kW (25 hp)	Soft Starter with isolation contactors and bypass starter
	Wastewater Lift Pumps – Variable Speed	Any	VFD with isolation contactors and bypass starter
Wastewater Flood Pumping Stations	Flood Pumps – Single Speed	>= 18.7 kW (25 hp)	Soft starter with bypass contactor (internal or external) and upstream isolation contactor.

7.5 Control Circuits

7.5.1 Motor Restart Control

Motor control circuits are to be designed to have anti-restart prevention, to prevent or delay automatic immediate restart after a stop or power failure situation. The purpose is to prevent restart of the motor while residual voltage could still be present in the motor. For motors 75 kW (100 hp) or greater, provide motor restart prevention. As per NEMA MG1 guidelines, motor restart shall be prevented until 1.5x the motor open circuit time constant. The delay could potentially be accomplished via a three-wire control (stop/start) control arrangement, timers to delay restart, or potentially an undervoltage relay with a restart time.

7.6 General Protection Requirements

1. The typical protection requirements for various applications are identified in Table 7-3. Note that the below is a general guide, and additional protection requirements may be required for specific applications. See Section 7.7 for some special protection requirements.

Table 7-3 : Typical Motor Protection Requirements

Application	Rating	Protection
600 V motors, single speed, general service	< 75 kW (100 hp)	Electronic Overload
	>= 75 kW (100 hp) < 187 kW (250 hp)	Overload Overcurrent Locked Rotor Ground Fault (zero-sequence CT) Winding Temperature (Thermistor or RTD)
	> 187 kW (250 hp)	Overload Overcurrent Locked Rotor Ground Fault (zero-sequence CT) Winding Temperature (RTD)
600 V motors, single speed, critical service	< 37 kW (50 hp)	Electronic Overload
	>= 37 kW (50 hp) < 75 kW (100 hp)	Electronic Overload Winding Temperature (Thermistor or RTD) Ground Fault (zero-sequence CT)
	>= 75 kW (100 hp) < 187 kW (250 hp)	Overload Overcurrent Locked Rotor Ground Fault (zero-sequence CT) Winding Temperature (RTD)
	>= 187 kW (250 hp)	Overload Overcurrent Locked Rotor Ground Fault (zero-sequence CT) Winding Temperature (RTD) Bearing Temperature
600 V motors, VFD driven	< 37 kW (50 hp)	Standard VFD protection
	>= 37 kW (50 hp) < 75 kW (100 hp)	Standard VFD protection Winding Temperature (Thermistor - PTC)
	>= 75 kW (100 hp) < 187 kW (250 hp)	Standard VFD protection Winding Temperature (RTD)
	>= 187 kW (250 hp)	Standard VFD protection Winding Temperature (RTD) Bearing Temperature

Application	Rating	Protection
Medium Voltage Motor	<= 746 kW (1000 hp) See Note 1	Overload Overcurrent Locked Rotor Ground Fault (zero-sequence CT) Phase Balance Undervoltage Winding Temperature (RTD) Bearing Vibration Bearing Temperature

Notes:

1. Medium Voltage motors greater than 746 kW will require, at minimum, the protection indicated, but in addition, shall be provided with additional protection as appropriate and in accordance with good industry practice.
2. Where bearing vibration and temperature sensors are required, they are required for each bearing.
3. Where PTC winding temperature is required, one detector shall be provided per phase.
4. Where RTD winding temperature is required, two RTDs are to be provided per phase.

7.7 Special Protection Requirements

Special motor protection requirements for specific applications are identified in Table 7-4. Note that the table is not comprehensive and a review of the protection requirements for special applications is required on a case by case basis. Special protection requirements are in addition to standard protection requirements discussed in Section 7.6.

Table 7-4 : Special Motor Protection Requirements (Minimum)

Application	Rating	Protection
Submersible Pumps – Process Applications	> 2.2 kW (3 hp)	Humidity / leak
	> 7.5 kW (10 hp)	Humidity / leak Winding Temperature (switch)
	>= 75 kW (100 hp)	Humidity / leak (in applicable compartments such as connection housing / stator / oil) Winding Temperature (RTD) Bearing Temperature
	>= 186 kW (250 hp)	Humidity / leak (in applicable compartments such as connection housing / stator / oil) Winding Temperature (RTD) Bearing Temperature Bearing vibration

7.8 Local Controls

The following are standard minimum requirements, and shall be augmented as required by the application.

7.8.1 Wastewater Collections & Land Drainage Facilities

1. Motor Driven Equipment – Single Speed
    - 1.1 Small motors (Not pumps)
        - a) Install a *Hand-Off-Auto* (HOA) or *On-Off* switch and a green *Running* pilot light at the MCC/Starter, as appropriate.
    - 1.2 Pump motors (< 37 kW (50 hp))
        - a) At the MCC/Starter, provide:
            - i. A *Hand-Off-Auto* (HOA) switch
            - ii. A blue *Ready* pilot light to indicate the motor is ready to run.
            - iii. A green Running pilot light to indicate the motor is running.
        - b) Install an E-Stop mushroom pushbutton at the starter, pump and motor levels. Provide a Reset pushbutton to allow the pump to restart.
    - 1.3 Pump motors (>= 37 kW (50 hp))
        - a) At the MCC/Starter, provide:
            - i. A Manual-Auto (M-A) and Start-Stop buttons
            - ii. A blue Ready pilot light to indicate the motor is ready to run.
            - iii. A green Running pilot light to indicate the motor is running.
        - b) Install an *E-Stop* mushroom pushbutton at the starter, pump and motor levels. Provide a *Reset* pushbutton to allow the pump to restart.
    - 1.4 In addition, if a soft starter and bypass starter are provided
        - a) Install a *Soft Start / Bypass* switch at the starter.
2. Motor Driven Equipment - VFD Drive
    - 2.1 Pump motors (< 37 kW (50 hp))
        - a) At the VFD starter, provide:
            - i. A HOA switch.
            - ii. A manual speed potentiometer to be utilized in Hand mode.
            - iii. A blue Ready pilot light to indicate the motor is ready to run.
            - iv. A green Running pilot light to indicate the motor is running.
        - b) Install an *E-Stop* mushroom pushbutton at the starter, pump and motor levels. Provide a *Reset* pushbutton to allow the pump to restart.
    - 2.2 Pump motors (>= 37 kW (50 hp))
        - a) At the VFD starter, provide:
            - i. A *Manual-Auto* (M-A) and *Start-Stop* buttons
            - ii. Install a manual speed potentiometer to be utilized in *Manual* mode.
            - iii. A blue *Ready* pilot light to indicate the motor is ready to run.
            - iv. A green *Running* pilot light to indicate the motor is running.
        - b) Install an *E-Stop* mushroom pushbutton at the starter, pump and motor levels. Provide a *Reset* pushbutton to allow the pump to restart.
    - 2.3 In addition, if a bypass starter is provided:

a) Install a *VFD / Bypass* switch at the VFD starter.

Notes:

1. For motors > 50 hp, momentary start / stop is provided to ensure motor does not restart after brief power interruption, as is possible if a Hand position is provided.
2. Use of Lock-Off-Stop switches will not be permitted as they imply lock-off capability for the equipment, but are not suitable for use as a disconnecting means.
3. Additional safety controls may be required for equipment with safety requirements. An emergency-stop switch shall be a minimum requirement when there is a potential safety risk.

7.8.2 Wastewater Treatment Plants

1. Small motors (<= 19 kW (25 hp))
   - 1.1 At the MCC/Starter/VFD, provide:
     - a) A *Hand-Off-Remote* (HOR) switch.
     - b) A green *Running* pilot light to indicate the motor is running.
2. Motors (>19 kW (25 hp) and < 37 kW (50 hp)), standby operation
   - 2.1 At the MCC/Starter/VFD, provide:
     - a) A *Local-Off-Remote* (LOR) switch and *Start-Stop* pushbuttons.
     - b) A green *Running* pilot light to indicate the motor is running.
3. Medium size and larger motors (>= 37 kW (50 hp))
   - 3.1 At the MCC/Starter/VFD, provide:
     - a) A *Local/Off/Remote* (LOR) and *Start-Stop* pushbuttons.
     - b) A green *Running* pilot light to indicate the motor is running.
   - 3.2 Provide a dedicated local e-stop near the equipment.

Notes:

1. For motors >= 19 kW (25 hp), momentary Start / Stop provided to ensure motor does not restart after brief power interruption, as is possible if a Hand position is provided. This is both for motor protection in the event of a very brief interruption and for reduction of potential load on a centralized standby generator.
2. Use of Lock-Off-Stop switches shall not be permitted as they imply lock-off capability for the equipment, but are not suitable for use as a disconnecting means. Existing Lock-Off-Stop switches can be maintained, provided that no significant modifications are made to the motor control circuit.
3. Additional safety controls may be required for equipment with safety requirements. An emergency-stop switch shall be a minimum requirement for equipment with a safety risk.
4. Where an Emergency Stop pushbutton is provided together with local control, the equipment shall utilize a Local / Off / Remote set of control modes, with separate Start and Stop pushbuttons. Equipment shall not restart automatically upon the Emergency Stop pushbutton being released, but rather require a separate restart action from either a local Start/Reset pushbutton or a start or reset action from the HMI.

7.9 Local Disconnect Switches

The following are standard minimum requirements, and shall be augmented as required by the application.

7.9.1 Wastewater Collections & Land Drainage Facilities

Local disconnect switches are not typically required within these facilities, due to the limited number of loads and small size of the facilities. However, local disconnect switches should be provided where the upstream equipment lockout procedure would expose personnel to a significant arc flash hazard.

7.9.2 Wastewater Treatment Plants

1. Small motors (< 37 kW (50 hp))
    - 1.1 Non-hazardous / non-corrosive location:
        - a) Install a local disconnect switch at the motor.
    - 1.2 Hazardous / corrosive location:
        - a) Local disconnect switches will not typically be provided unless maintenance disconnect requirements are very frequent (more than weekly). See Note 2.
2. Medium size and larger motors (>= 37 kW (50 hp))
    - 2.1 Local disconnect switches will not typically be provided unless maintenance disconnect requirements are very frequent (more than weekly)
3. Where a local disconnect switch is installed, provide an early-break auxiliary contact from the disconnect switch to provide indication when the motor disconnect is open for the following cases:
    - 3.1 VFD driven equipment; or
    - 3.2 Equipment that is utilized for standby operation and is critical to start when required.
4. Where a motor starter is local to the motor the disconnect may be included as part of the motor starter.
5. Hasps on 120 V panelboard breakers are not acceptable disconnecting means for motors.

Notes:

1. For all disconnect switch applications, ensure that the disconnect SCCR is appropriate for the application. Where the SCCR is higher than the typical disconnect switch capability, a case may be made for omission of the disconnect switch provided that the maintenance requirements are not excessive. Fuse-based disconnects to obtain a higher SCCR may only be utilized where deemed absolutely necessary.
2. Local disconnect switches should also be provided where the upstream equipment lockout procedure would expose personnel to a significant arc flash hazard.

7.10 Emergency Stop Systems

Where emergency stop systems are implemented, they shall comply with CSA Z432 Clause 6.2.5.2.2 which states:

6.2.5.2.2 Effects of emergency stop and reset commands

> *Once active operation of the emergency stop device has ceased following an emergency stop command, the effect of this command shall be sustained until the device is reset. This reset shall be possible only at that location where the emergency stop command has been initiated. The reset of the command shall not restart the machinery but shall only permit restarting.*

This requires a *Reset* or *Power On* pushbutton to allow the restarting of equipment after an e-stop has been reset. Within the Water and Waste Department, most equipment runs unattended 24 hours a day, with automatic controls. Thus, typical implementation requirements of an e-stop system include the following:

1. Provide a reset button on the motor starter (or control panel) to latch in a ready coil after an e-stop. Alternately, the function could be written in PLC logic, if appropriate for the application.
2. Ensure that systems where continuous unattended operation is required will appropriately restart after a power failure. This may require an automatic reset of the e-stop system after a power failure.

Some e-stop applications require a higher level of safety reliability as per the ISA-84 series of standards. Applications where equipment is not fully guarded, such as open conveyors, are one example where additional requirements apply.

8 EQUIPMENT APPLICATION REQUIREMENTS

8.1 HVAC Equipment

1. Air Handling Units

    1.1 Natural Gas Fired Air Handlers:

        1.1.1 On-Off (non-variable speed) applications may have the motor starter included as part of the natural gas-fired package system.

        1.1.2 Variable speed applications:

            1.1.2.1 AHU's located on the roof shall have the VFD located in the electrical room.

            1.1.2.2 AHU's located in a location with potential corrosive or explosive gases shall have the VFD located in the electrical room.

            1.1.2.3 Where the AHU is not on the roof and it is not in a location with potential explosive or corrosive gases, the VFD may be located in the electrical room, adjacent to the AHU in a separate enclosure, or as part of the AHU cabinet. The VFD may be packaged with the AHU; however, all other requirements associated with VFDs still apply. Ensure that the VFD display is easily accessible.

    1.2 Hydronic or Electric Heater Air Handlers:

            1.2.1.1 AHU's located on the roof shall have the VFD / motor starter located in the electrical room.

            1.2.1.2 AHU's located in a location with potential corrosive or explosive gases shall have the VFD / motor starter located in the electrical room.

            1.2.1.3 Where the AHU is not on the roof and it is not in a location with potential explosive or corrosive gases, the VFD / motor starter may be located in either the electrical room or in an enclosure adjacent to the AHU. Packaging of the AHU motor control with the AHU is not acceptable.

2. Exhaust Fans

    2.1 Motor starters and VFDs for process exhaust fans shall always be located in electrical rooms.

This page is intentionally blank.

9 POWER SYSTEM MONITORING

9.1 Pilot Lights

1. Where pilot lights are utilized, the colour convention shall be as per Table 9-1.

Table 9-1 : Pilot Light Colors

Function	Wastewater	Water	Notes
Alarm / Warning – Priority 1 - Process	Red	Amber	
Alarm / Warning – Priority 1 - Electrical System	Amber	Amber	See Note 3
Alarm / Warning – Not Priority 1	Amber	Amber	
Circuit De-energized	Red	Green	
Circuit Energized	Green	Red	
Miscellaneous Status	Blue	Blue	
Motor Not Running	Blue	Green	Not Normally Provided
Motor Running	Green	Red	
Switch / Breaker Closed	Green	Red	
Switch / Breaker Open	Red	Green	
Warning	Amber	Amber	

Notes:

1. The colours for the wastewater system have been selected from an operations perspective. The colour red indicates an abnormal situation that requires attention, while the colour green indicates that equipment / power is in a normal condition. It is noted that these colors are different than much of the electrical industry and thus appropriate labelling and training is required.
2. Many existing systems within the wastewater facilities currently are based upon the colors indicated in the Water column.
3. The alarm / warning – Priority 1 color for electrical systems in wastewater facilities has been selected to be amber to avoid conflict with the switch / breaker closed status indication.

9.2 Power Meter Requirements

1. Multifunction power meters shall be provided as per Table 9-2.
2. Enhanced power meter requirements shall include:
   - 2.1 Local display for all measurements.
   - 2.2 Functional Requirements:
     - a) Volts, Amps, kW, kVAR, PF, kVA (per phase)
     - b) Frequency, kWh, kVAh, kVARh
     - c) Minimum 17 µs transient detection
     - d) Sampling rate of 1024 samples/cycle or better

2.3 Measurement Accuracy:

a) Power Class A monitor conforming to IEC 61000-4-30

b) 0.2% energy

c) 0.1% current

d) 0.1% voltage

e) Voltage and current harmonics measurement, individual, even, and odd, up to 63rd, %THD (Total Harmonic Distortion) Monitoring for voltage and current per phase.

f) Min / Max recording capability

2.4 The meter shall have an accuracy of +/- 0.5% or better for volts and amps, and 0.2% for power and energy functions. The meter shall meet the accuracy requirements of IEC62053-22 (class 0.5%) and ANSI C12.20 (Class 0.2%).

2.5 The meter shall provide true RMS measurements of voltage, phase to neutral and phase to phase; current, per phase and neutral.

2.6 Ethernet Modbus TCP Communication capability, interconnected with the Ethernet Control Network, for communicating with the control system.

3. Basic power meter requirements shall include:

3.1 Local display for all measurements.

3.2 Functional Requirements:

a) Volts, Amps, kW, kVAR, PF, kVA

b) Frequency, kWh, kVAh, kVARh

c) % THD (Total Harmonic Distortion) Monitoring for voltage

d) Min / Max recording capability

3.3 The meter shall have an accuracy of +/- 0.5% or better for volts and amps, and 0.2% for power and energy functions. The meter shall meet the accuracy requirements of IEC62053-22 (class 0.5%) and ANSI C12.20 (Class 0.2%).

3.4 The meter shall provide true RMS measurements of voltage, phase to neutral and phase to phase; current, per phase and neutral.

4. All power meters in wastewater treatment facilities shall be Schneider Electric.

5. Ensure the metering system is not dependent on power from the metered circuit for its operation. The power supply for the power meter shall be powered by a battery-backed power source, which ensures operation when the metered circuit is de-energized.

Table 9-2 : Power Meter Requirements

Facility Type	Equipment	Advanced	Intermediate	Basic	Enhanced
All	Medium voltage main breakers - utility service	X			
	Medium voltage main breakers - not utility service		X		X
	Medium voltage feeder breakers.		X		X
	Medium voltage main switches of fused gear, unless the equivalent current reading can be provided by upstream feeders.		X		
	600 V switchgear main breakers.		X		X
	600 V switchgear feeder breakers rated 500 A or greater, where there is no downstream power meter. Note that power meters at the load are preferred in this case for accurate load voltage measurements.			X	X
	600 V distribution panelboards rated 1000 A or greater.				X
	600 V distribution panelboards rated 400 A – 800 A or less than 400 A, but fed from a utility transformer or a transformer with a medium voltage primary.			X	
	MCCs with a connected load of 600 A or greater.				X
	MCCs with a connected load of 250 A – 599 A or less than 250 A, but fed from a utility transformer or a transformer with a medium voltage primary.			X	
	Essential Power System – Main breaker / Distribution rated >= 500 kW				X
	Essential Power System – Main breaker / Distribution rated >= 100 kW and < 500 kW			X	

Facility Type	Equipment	Advanced	Intermediate	Basic	Enhanced
	Essential Power System – 600 V distribution panelboards with a demand load of 200 A or greater.			X	
	Essential Power System – MCC with demand load of 100 A – 599 A			X	
	Generator – Medium Voltage	X			
	Generator – 600 V		X		

9.3 HMI / SCADA Monitoring and Control Requirements

1. All enhanced power meters, as per Section 9.2 shall be connected to the HMI / SCADA system via a network connection.

    1.1 All key values including phase voltages, phase currents, kW, kVAR, PF, kVA and THD shall be available from the HMI, logged to the historian, and made available via trending.

2. Additional HMI / SCADA monitoring and control requirements of the electrical distribution system shall be provided as per Table 9-3.

3. The PLC / DCS shall have one or more power fail status inputs from the power distribution system.

    3.1 Ensure appropriate power fail status inputs are provided to allow for effective implementation of required control strategies.

    3.2 Network power meter connections shall not be relied upon for power fail status in control systems, where real-time control associated with the power status is required. Power meter response time of the network has in the past been demonstrated to cause issues in control logic applications.

    3.3 Sufficient power fail status input shall be provided to allow a reasonable representation of power availability to controlled motor loads.

Table 9-3 : Electrical Power System Monitoring and Control Minimum Requirements

Item	Monitoring	Control
Automatic Transfer Switch	Normal Position Emergency Position Common Fault	N/A
Breaker – High Voltage	Closed Status Open Status Breaker / Relay Fail Status Local Status (Local/Remote) Remote Status (Local/Remote)	Close Command Open Command
Disconnect Switch – High Voltage, non-motorized	Closed Status Open Status	
Breaker – Medium Voltage	Closed Status Open Status Breaker Rack Position Status Breaker / Relay Fail Status Control Power Fail (may be included in Fail status) Local Status (Local/Remote) Remote Status (Local/Remote)	Close Command Open Command
Disconnect Switch – Medium Voltage	Closed Status Open Status	
Breaker – 600 V >= 2000A	Breaker Closed Status Breaker Open Status	Close Command Open Command
Breaker – 600 V >= 600 A	Breaker Closed Status Breaker Open Status	As required for load shedding strategy implementation.
Breaker – 600 V < 600 A	As required for load shedding strategy implementation.	As required for load shedding strategy implementation.
Capacitor / Power Factor Correction Bank	Alarm / Trouble	N/A
Neutral Grounding Resistor	Ground Fault Alarm	N/A
Motor Control Centre – General (specific requirements apply to MCC components)	Power Fail Status	N/A
Protection Relay – Medium Voltage	Alarm Trip Fail	N/A
Standby Generator	Auto / Manual Status or Local / Remote Status as applicable Run Trouble Failure	Full Control

Item	Monitoring	Control
Switchgear Battery System	AC Power Fail DC Power Fail Charging System Fail High VDC Low VDC Positive Ground Fault Negative Ground Fault	N/A
Transformers >= 1000 kVA	Temperature Alarm Requirements of Section 6.11	
Transformers >= 300 kVA	Temperature Alarm Requirements of Section 6.11	
TVSS	Status/Fault	
UPS	Battery Low Fault	

9.3.2 Additional Requirements for Wastewater Lift Stations

1. Provide voltage and phase loss monitoring for all incoming power distribution (600 V).
2. Provide 120 VAC power failure monitoring for all 120 VAC distribution systems.

9.3.3 Additional Requirements for Wastewater Flood Stations

1. Provide voltage and phase loss monitoring for all incoming power distribution (600 V).
2. Provide 120 VAC power failure monitoring for all 120 VAC distribution systems.

This page is intentionally blank.

10 PROTECTION

10.1 General

1. Design protection equipment so that the initial electrical installation, and future additions and modifications to the installation will be protected and fully coordinated, meaning that in the event of a fault or overload, protective devices will act to isolate only the faulty portion of the system and areas downstream, leaving all other portions of the system fully operational.
2. Ensure protection adequately protect against injury to persons and damage to property.

10.2 Instrument Transformers

1. Current transformer circuits shall be grounded on the secondary side.
2. Provide test blocks for all CT circuits.
3. Test blocks are not required on PT circuits. Potential transformer circuits shall be grounded on the secondary side.
4. Current transformer calculations shall be based on IEEE C.37.110 “Guide for the Application of Current Transformers Used for Protective Relaying Purposes” and take into account expected loading, short circuit levels, X/R values, and protective relaying burdens with a minimum thermal rating of 2.0..

~~5.~~ Current transformers for medium voltage switchgear feeders shall be multi-ratio CTs.

10.3 Protection for Distribution <= 600 V

10.3.1 Circuit Breakers

1. Circuit breakers are required for 600 V distribution and below.
2. Ensure that circuit breakers are rated for the design SCCR at the specific point in the distribution.
3. Series breaker ratings are not permitted for the purpose of reducing the SCCR of downstream circuit breakers. All exceptions shall be accepted by the City. Ensure that the breakers selected provide selective coordination to the greatest extent possible. LS, LSI, and LSIG breakers shall be specified where required to achieve selective coordination. This may require the use of larger frame circuit breakers to achieve the required coordination.
4. Without limiting other requirements of this section, at a minimum:
   - 4.1 For breakers rated 600 A or greater, provide LSI or LSIG breakers;
5. Breaker and Protection Relay Settings Datasheets:
   - 5.1 For installations where the service rating is < 1000 kVA, indicate all breaker and protection relay settings on the drawings.
   - 5.2 For installations where the service rating is >= 1000 kVA, provide protection settings datasheets, divided by area code and equipment, that comprehensively indicate all breaker and protection relay settings.

10.3.2 Fuses

1. Fuses are acceptable in 600 V distribution and below in the following situations:
   - 1.1 For protection of VFDs to meet manufacturer's requirements.
   - 1.2 For protection of capacitors.
   - 1.3 For protection of staged electric heaters.
   - 1.4 For protection of control power transformers or voltage instrument transformers.
2. Class J fuses are preferred for general purpose power use in new installations.

10.3.3 Ground Fault Protection

1. Provide ground fault protection for systems as follows:
   - 1.1 For systems rated 1000 A or more, ground fault protection is mandatory to de-energize all circuits.
   - 1.2 For systems rated less than 1000 A, ground fault protection at the main breaker is subject to City acceptance. However, the following should be noted:
     - a) Ground fault protection should be provided where additional protection is required to reduce damage in the event of a ground fault.
     - b) Ground fault protection may be provided for individual loads and feeders.
2. The delay associated with ground fault protection must not exceed 1 second.
3. Ground fault protection applied solely to the facility main breaker is not acceptable.
4. Where ground fault protection is provided, selective coordination of the ground fault protection shall be provided as follows.
   - 4.1 For essential power systems and systems feeding critical loads with ground fault protection, the selective coordination of the ground fault protection system must limit the affected outage to the area of the ground fault. All exceptions are to be accepted by the City.
   - 4.2 For all systems not addressed under 4.1 above, appropriate coordination shall be provided to limit the affected zone in the event of a ground fault trip
5. The ground fault setting of main breakers and feeders would be limited to 30% of the circuit breaker rating; however, the selective coordination of the application must be reviewed by the City. There are applications where selective coordination is deemed to be a higher requirement than a low ground fault protection setting.
6. For systems that have their neutral grounded through a Neutral Grounding Resistor (NGR), main ground fault detection can be provided using either voltage detection method (59N) and/or zero sequence current detection method (50/51G). A Startco SE-330 relay is capable of both these functions.
7. Ground fault detection may utilize a residual CT connection if the ground fault trip current is 10% or higher of the CT current rating.
   - 7.1 Residual CT ground fault measurement is not applicable to high resistance grounded systems.
8. Ground fault detection on high-resistance grounded systems must utilize a zero-sequence CT.

10.4 Protection for Medium Voltage Distribution

1. Circuit breakers are required in all medium voltage applications, except as follows:
   - 1.1 Protection of individual loads or transformers <= 2 MVA;
   - 1.2 Appropriate protection is provided to address potential single phase issues; and
   - 1.3 The resulting downstream arc flash energies are limited to Category 2 or lower.
2. The protection relays shall be provided with the following protection elements, at minimum:
   - 2.1 Short circuit protection at all levels (IEEE 50)
   - 2.2 Overload protection at all levels (IEEE 51)
   - 2.3 Ground fault protection (IEEE 51G)
3. The following protection shall be provided for all medium-voltage service applications:
   - 3.1 Phase loss/unbalance protection (IEEE 46) shall be provided in any case where upstream fusing is provided.
   - 3.2 Frequency protection (IEEE 81)
   - 3.3 Overvoltage protection (IEEE 59)
   - 3.4 Negative Sequence (IEEE 47N)
4. The requirement for under voltage protection (IEEE 27) shall be evaluated on a case-by-case basis. It is noted that it is not acceptable to trip a facility main breaker on temporary power failure, whereby a manual reset of the breaker is required to restore power.
   - 4.1 All installations of Undervoltage protection on main breakers shall be approved by the City.
5. Provide reverse power protection (IEEE 32) when generators are synchronized with the utility service.
6. Provide transformer differential protection (IEEE 87T) for:
   - 6.1 Transformers rated 5 MVA and above, for installations with no redundancy;
   - 6.2 Transformers rated 7.5 MVA and above, for critical installations, with or without redundancy; and
   - 6.3 For all transformers rated 10 MVA and above.
   - 6.4 Differential protection for smaller transformers shall be evaluated on a case-by-case basis and reviewed with the City.
7. Provide zone/bus (IEEE 87Z or IEEE 87B) differential protection for indoor switchgear in a clean environment with a capacity of 10 MVA or greater and on outdoor switchgear or indoor switchgear not in a clean environment with a capacity of 7.5 MVA or greater.
   - 7.1 Zone/bus protection may be utilized to reduce the available arc flash energy to meet the requirements of Section 13.
8. Provide optical protection relays in switchgear where required to reduce arc flash ratings below 8cal/cm^2. Refer to Arc Flash Section in Appendix A

10.4.2 Ground Fault Protection

1. As discussed in Section 3.8, resistance grounding is recommended for medium voltage systems.
2. All medium voltage loads, such as motors, must be provided with dedicated ground fault protection.

3. All feeders must be provided with ground fault protection, unless it can be demonstrated that ground fault protection of the feeder is adequately provided via alternate protection, without impacting selective coordination and accepted by the City.

10.5 Resistance Grounding Ground Fault Detection Systems

10.5.1 Low Voltage/High Resistance Grounding

1. During the 1st phase to ground fault, the NGR system will:
   1.1 Alarm with both a local pilot light and an alarm to the PCS, allowing personnel to correct the problem or allow for an orderly shutdown of the process.
2. During the 2nd phase to ground fault, the protection system will:
   2.1 Trip the main breaker to de-energize the system.
3. Design the system to provide continuity of power upon a single ground fault event.
4. Provide a pulser-based system along with all required tools to allow maintenance personnel to diagnose and troubleshoot the location of the ground fault.

10.5.2 Low Resistance Grounding

1. Ensure all medium voltage ground faults trip the circuit breaker closest to the fault.

11 STANDBY AND EMERGENCY GENERATION

11.1 General Requirements

1. Generator ratings shall be selected based upon the ISO 8528 standard. ISO 8528 ratings are summarized as follows:
    - 1.1 Continuous Power
        - a) The rated output is available continuously, with average power output within 70% to 100% of the rating.
    - 1.2 Prime Power
        - a) The generator may run continuously, with an average power output of up to 70% of the rating over 24 hours.
    - 1.3 Limited Time Running Power
        - a) The rated output is available for up to 500 hours per year, with average power output up to 100% of the rating.
    - 1.4 Emergency Standby Power
        - a) The generator may run up to 200 hours per year, with an average power output of 70% of the rating over 24 hours.
2. Engine exhaust system:
    - 2.1 Exhaust gas piping to be insulated
    - 2.2 Piping designed to prevent vibration isolation from generator set to piping and therefore to building.
    - 2.3 Piping to be equipped with drain valves at the lowest point to drain condensation.
    - 2.4 Piping to be designed in such a way that exhaust is away from building ventilation air intakes.
    - 2.5 Piping to be designed in such ways that it is above the building perimeter to allow for easy dispersal of exhaust gases.
    - 2.6 Allow for expansion due to high temperature without affecting building supports.
    - 2.7 Provide piping of suitable size and length to prevent exceeding the backpressure on engine.
3. Generator cooling system:
    - 3.1 Provide the required ambient air temperature range for the generator room.
    - 3.2 Provide radiator based cooling/ or remote radiator cooling depending on engineering analysis of generator room temperature rises.
    - 3.3 Provide fresh air intake (combustion air + cooling air) and generator room ambient air exhaust fans as required to maintain the required operating ambient temperature.
4. Fuel supply system:
    - 4.1 Considerations to include when evaluating natural gas vs diesel fuel:
        - a) The energy density of natural gas is lower than diesel fuel, which may require larger engines for large generator sets (typically in excess of 1 MW capacity), This will have an impact on initial purchase costs for the unit as well as the associated support infrastructure including building space and must be weighed against the cost of providing diesel fuel storage and the associated diesel fuel ongoing supply and maintenance issues.

b) In instances where the generator application would require extended periods of operation, the frequency of overhaul for natural gas engines is typically higher than for diesel engines.

4.2 Natural gas is the preferred fuel for City installations where:

- Natural gas is available;
- The availability, cost, and size differential of the natural gas generator compared to the diesel generator are acceptable.

4.2.1 If the generator is an emergency generator, ensure that natural gas is acceptable as per CSA C282 and the AHJ.

4.3 Where diesel fuel is selected:

4.3.1 Provide a day tank for fuel within the generator room.

4.3.2 Comply with CSA C282 for fuel and piping requirements.

5. Generator set control panel

5.1 Provide automatic remote start ability.

5.2 Provide a “Hand-Off- Auto” selector for manual operation or Auto operation.

5.3 Provide local alarm indications.

5.4 Provide connections for remote alarms.

5.5 Provide remote connections using discrete relays and communication ports for monitoring of generator set status, alarms

5.6 Provide automatic controls for auxiliary heating, block and space heating.

5.7 Provide generator paralleling controls if required for the application.

6. Engine starting systems:

6.1 Provide storage battery/battery charger to power starting system.

6.2 Batteries shall be as recommended by the manufacturer and designed for the required cold cranking cycles.

6.3 Cold cranking cycles to comply with CSA C282.

6.4 Provide monitoring of battery voltage and automatic alarm to warn of low battery.

6.5 Battery system shall be designed to operate in extreme temperature range that may occur inside the generator room.

7. Alternators:

7.1 For smaller generators, provide alternator winding with 2/3rd pitch. For larger generators > 1 MW, consider the use of higher pitch windings.

7.2 Comply with CSA C22.2 No. 100 for construction.

7.3 Windings shall be copper.

7.4 Provide suitable exciter in static or direct connected type.

7.5 Automatic voltage regulator shall be permanent magnet, quick voltage build up type.

7.6 Provide complete alternator datasheet, and parameters.

7.7 Alternator shall be designed to be able to withstand, electrically and mechanically, 300% of its full load current for 1 second with its terminals shorted.

8. Neutral Grounding Resistors:

8.1 Provide generator neutral grounding resistors as required to incorporate into the electrical design, but at minimum, should be provided for all generators rated 1 MW and over.

9. Automatic transfer switches:

    9.1 Provide ATS in compliance with CSA C22.2 No. 178.

    9.2 Transfer equipment should be designed, installed and maintained in such a way that it will never allow inadvertent interconnection of the standby power source with the normal power source.

    9.3 Most applications will utilize open transition transfer (break before make) for simplicity.

        a) Ensure that the open delay is sufficient for residual voltage of motor loads to dissipate.

    9.4 Closed transition transfer switches shall be provided when the facility cannot accept temporary power interruptions when transferring from the standby to utility source.

    9.5 Where closed transition transfer switches are required, selection is typically between three major types:

        a) Momentary Passive:

            i. The transfer switch waits for the generator to passively synchronize with the utility source and then closes the utility switch. The generator switch is opened within 100ms of the utility switch closing.

            ii. The transfer switch must be CSA approved.

            iii. Under-voltage protection and an automatic synchronization check are required.

        b) Momentary Active:

            i. This type of transfer is the same as momentary passive discussed above, except that the generator is actively controlled by an automatic synchronizer.

        c) Soft Transition:

            i. In a soft transition transfer scheme, the synchronization is controlled by an automatic synchronizer, but the generator is paralleled with the utility source for longer than 100 ms. This allows the loads to be gradually transferred from the generator to the utility source over a short period of time, typically 2 to 10 seconds.

            ii. This type of transition requires additional protection and coordination with the utility.

    9.6 Ensure that separate, interlocked bypass feeders are provided around automatic transfer switches to allow for maintenance on transfer switches without interrupting critical loads.

10. Load bank connection

    10.1 If the generator is classified as an emergency generator, the system must be operated under a minimum of 30% load monthly, and 100% load annually.

        a) Unless the City has a portable load bank of the appropriate size, provide a permanent load bank for testing purposes.

    10.2 If not classified as an emergency generator, at minimum provide provision for connection of a temporary load bank subject to acceptance by the City.

11. Provide at minimum the following signals to the control system for each standby generator:

    11.1 Generator running

    11.2 Generator fail

11.2 Emergency Loads

Reference Section 3.6of this Design Guide

1. In accordance with the National Building Code, a generator shall be classified as an emergency generator if it feeds life safety equipment, such as:
   - 1.1 Fire alarm and emergency voice communications systems;
   - 1.2 Firefighters' elevators and elevators serving storeys above the first storey in a high building;
   - 1.3 Fire protection water supply pumps that depend on electrical power supplied to the building;
   - 1.4 Smoke control systems;
   - 1.5 Fans required for smoke control;
   - 1.6 Emergency lighting; and
   - 1.7 Exit signs.
2. An emergency generator may power other essential (non-emergency) loads, provided that they are switched via an independent transfer switch and arranged in a manner to not compromise the emergency power system.
3. Certain other critical loads should be considered for connection to the emergency generator via the emergency power branch; however these loads are not acknowledged in current codes as emergency loads. Thus, it is recommended to perform a review of the criticality of the loads, provide a recommendation based upon good engineering practice, and discuss with the AHJ for approval.
   - 3.1 Other loads for potential connection to the emergency power distribution include:
     - a) Aircraft warning lights,
     - b) Critical ventilation where a combustible or toxic atmosphere could be created within a short amount of time.
   - 3.2 While not applicable in Canada, it is recommended to review NFPA 70 requirements associated with Critical Operating Power Systems (COPS) as a reference.
4. Auxiliary systems associated with emergency generation must also be powered from the emergency power distribution system. An example is generator room ventilation equipment.
5. Emergency generators must meet the requirements of CSA C282.
6. Emergency loads must be provided with a separate transfer switch and distribution from the non-emergency essential power loads.

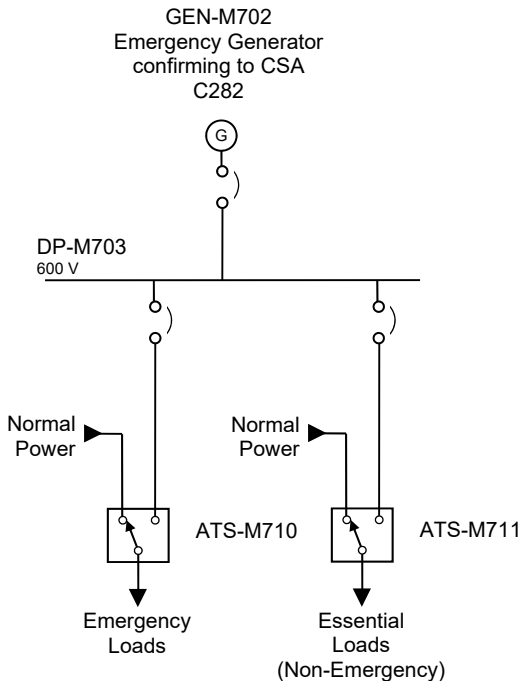

Figure 11-1: Emergency Generator utilized for both Emergency and Essential Loads

11.3 Essential Loads

Reference Section 3.6 of this Design Guide

1. Essential (non-emergency) loads should be powered via a standby generator, or the standby power branch of an emergency generator system (as shown in Figure 11-1).
2. The following loads should typically be designated as Essential Loads:
   - 2.1 Essential process motor loads, including critical motor operated valves.
   - 2.2 UPS systems
   - 2.3 Switchgear DC control power supplies
   - 2.4 Plant security/CCTV systems
   - 2.5 Ventilation systems that must remain operable during a power failure.
3. The requirement for standby power for process systems shall be decided on a case-by-case basis. Consider risks to the process and operating licence conformance.

11.4 Generator Set Sizing

1. It is recommended that the generator sizing be confirmed by the manufacturer based on load profile provided by the responsible engineer and subject to acceptance by the City.
2. A standby/emergency generator should be sized in such a manner that on average the running load will not be below 30% of its rated kVA capacity. Permanent load banks may be required to be operated in parallel with plant loads less than 30%, in order to protect the generator from engine related reliability issues. If loads less than 30% are expected, review the application with generator manufacturers.
3. Maximum allowable Step Loading: The maximum allowed single step loading will cause a voltage dip that should stay within the operating voltage range of all live loads, which indirectly will decide the generator kVA rating. Generators may be sized based on picking all load up in a single step or alternatively designing the single step to pick up a maximum load step in a sequential loading plan.
4. Maximum allowable single step frequency dip: The maximum allowed single step loading will also cause a single step frequency drip which in turn will have a bearing on the generator kVA rating.
5. Increased ambient temperatures will require higher kVA rating.
6. All generators are to be designed with a minimum of 10% spare (reserve) capacity.
   - 6.1 Where the generator is classified as an emergency generator, the 10% spare (reserve) capacity shall be retained throughout the life of the generator, as per CSA C282.
   - 6.2 Where the generator is not classified as an emergency generator, the 10% spare (reserve) capacity may be utilized for expansion, if accepted by the City.
7. Single Phase Loads versus Three Phase loads: Each load that is being analyzed must be converted into current loadings and power factor. Each phase must be summarized individually to arrive at the highest phase loading and power factor which will decide the generator kVA ratings, operability and stability.
8. Transformer inrush: Ensure that upstream distribution transformers and generator sets are sized to handle transformer inrush 100% of the time without any issues, trips or alarms. Special generator start sequences, such as online reduced voltage generator starting, to reduce transformer inrush shall not be required. Where parallel generators are installed, ensure that transformer inrush can be met by 50% or N-2 of the generators running, whichever is greater. Provided that automatic, PLC controlled switching systems are installed to control the sequencing of loads on generator power, the generator installation may be designed to address the inrush of one transformer at a time. For any loads that do not have automatic sequencing, the transformer inrush loads shall be considered in parallel.
9. Design Load Calculations:
   - 9.1 Conduct a thorough study to identify each and every type and size of emergency/essential loads that the emergency/standby generator will power after the normal power has failed. Note the individual load power factors as they will be required to establish the distribution of real power and reactive power in the alternator.
     - a) Three phase generators are rated for 0.8 PF. Lower power factors at rated kVA will require larger alternators.
     - b) Generators that will be supplying only leading power factor loads should be treated with extreme caution, as these can cause the generator set to lose

control of its voltage. An example is UPS loads, or data servers which may exhibit leading PF load characteristics.

9.2 Determine the maximum time delay that can be suffered by each load before each load is transferred to generator power. The time delay with the least value will be the deciding factor for adjusting the start-up delay of the generator.

9.3 Determine all motor loads and calculate the starting kVA of each motor load. Based on diversity of all motor loads, calculate the total motor starting kVA which must be supported by the generator.

9.4 Identify VFDs and non-liner loads with harmonic contribution to the generator voltage and current. Ensure that appropriate generation capacity is provided to address the harmonics present.

9.5 Review UPS loads to ensure sufficient generation capability is provided for charging current and harmonics.

9.6 After totalling all loads, add 10-25% to allow for future kVA capacity increase.

10. Regenerative loads:

10.1 Regenerative loads are typically elevators, cranes, hoists and sometimes pumps. These loads when braking or decelerating will feed energy back to the generator leading to over-speeding and consequent tripping of the generator. This situation may require keeping some non-critical loads powered on the generator set so that they can absorb extra energy and prevent a mechanical overspeed of the engine.

11.5 Temporary Generator Connection

1. Temporary generator connections shall be utilized at critical facilities that do not have permanent emergency/standby generators.
2. Consult with the City to determine if a standard for a plug / receptacle system exists, which would allow for fast, straightforward hook-ups without errors.
3. Supply a junction box with terminals for temporary generator connection. The breaker connected to the junction box shall be interlocked with the utility breaker.
4. Connect temporary (grounded wye) generators for 3Ø3W installations as shown in Figure 11-2. Note that 3Ø3W installations are preferred for systems interconnecting with generators.
5. Connect temporary (grounded wye) generators for 3Ø4W installations as shown in Figure 11-3.
6. The generator frame must be bonded.

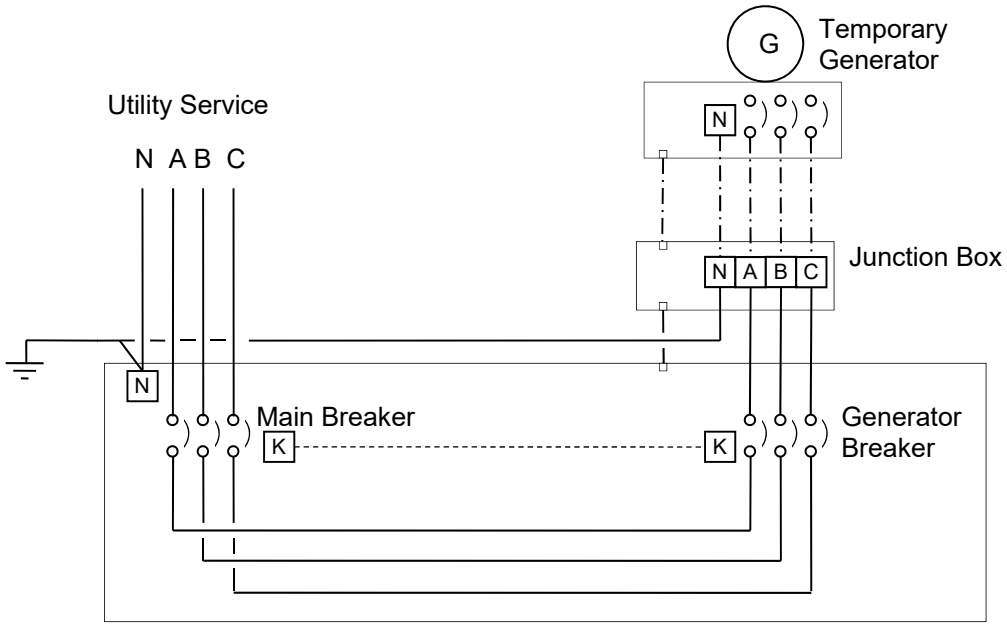

Figure 11-2: Temporary Generator Connection - 3Ø3W

Note: The above assumes a grounded wye connected generator.

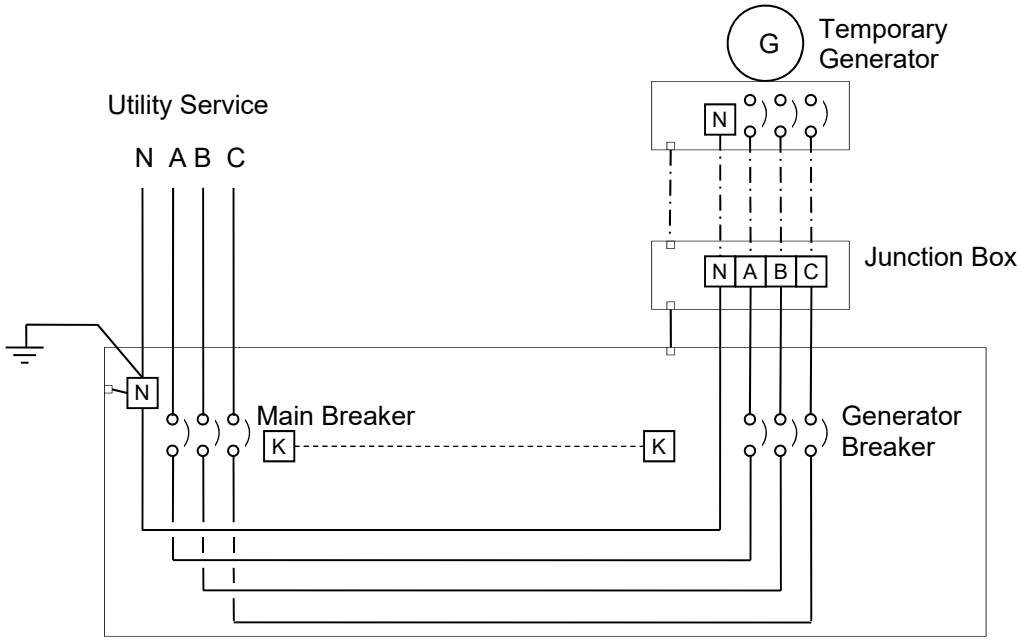

Figure 11-3: Temporary Generator Connection - 3Ø4W

Note: The above assumes a grounded wye connected generator.

12 HAZARDOUS LOCATIONS

12.1 General

1. Prepare comprehensive hazardous location drawings for all facilities containing a hazardous area, in accordance with Section 19.2.7.
2. Design, installation, selection of equipment and materials, shall be based on the Hazardous Location Drawings produced for the facility.
3. Hazardous locations should be selected based on the requirements of:
   - 3.1 Winnipeg Electrical Bylaw
   - 3.2 Canadian Electrical Code (CSA 22.1)
   - 3.3 NFPA 820
4. It is recommended that API Standard 505 be utilized as a reference document.

12.2 Wastewater Facilities

All wastewater facilities will typically have hazardous locations. Utilize NFPA 820, along with appropriate engineering analysis to determine appropriate area classifications. Plan drawings that clearly indicate the hazardous locations shall be created for all facilities.

12.3 Design Requirements

12.3.1 Class I, Zone 0 Locations

1. Hazard:
   - 1.1 An explosive gas mixture is present continuously or for long periods of time, at a level above the Lower explosive limit (LEL).
   - 1.2 Common areas are spaces inside vessels or chambers containing flammable mixtures, liquids, or spaces around vents from such sources.
2. Zone 0 Installation Requirements:
   - 2.1 Where possible, electrical equipment shall not be installed in Zone 0 locations.
   - 2.2 Where required, electrical equipment that can be used in Class I, Zone 0 locations shall be:
     - a) Approved for equipment protection level Ga (IEC);
     - b) Approved as being intrinsically safe, type i, or ia;
   - 2.3 Ensure code requirements for Zone 0 locations are met.

12.3.2 Class I, Zone 1 Locations

1. Hazard:
   - 1.1 An explosive gas mixture is likely to occur in normal operation.
   - 1.2 Common areas are locations adjacent to Class I Zone 0 locations, from which explosive gas mixtures could be dispersed.

2. Zone 1 Installation Requirements:

2.1 Transformers and capacitors shall be installed in electrical equipment vaults with no doorway between the room and the Zone 1 classified area. Provide adequate ventilation in vault. Vents shall be provided to contain electrical explosions and convey the pressure and gases safely outside the building.

2.2 Cable glands shall be of sealing type, and suitable for Class I, Division 1, or Zone 1

2.3 Wiring method shall be threaded rigid metal conduit or cables approved for the hazardous location with associated cable glands.

2.4 All boxes, enclosures, fittings shall be threaded type for connection to conduit and cable glands.

2.5 All fittings between the conduit seal and the explosion proof rated enclosures must be explosion proof type to contain any explosion and withstand the same pressures built up in the enclosure.

2.6 Splices and taps shall not be located in fittings which are only compound filled (non-pressure withstand).

2.7 The use of single conductor metallic armoured cable in Zone 1 locations is not permitted. Armoured single conductor cables with high currents are a possible ignition source due to high magnetic field and consequent energy available in the cable.

2.8 It is preferred to use three-conductor power cables with balanced loadings on all three conductors to cancel out the magnetic effect on armour.

2.9 Cable trays can be used in Zone 1 locations, however they should be bonded to prevent occurrence of circulating currents.

2.10 Conduits shall be sealed when crossing Zone 1 boundaries to prevent migration of gas vapours into other areas.

2.11 Explore the possibility of reducing the hazard by incorporating ventilation in Zone 1 along with failure protections, which may lead to modification of the hazardous location to less severe Zone 2, thereby enabling use of lower rated and classified equipment. It should also be noted that electrical maintenance in Zone 2 locations is more straightforward.

2.12 Electrical equipment that can be used in Class I, Zone 1 locations shall be:

a) Approved for Class I or Class I, Div. 1 locations;

b) Approved for equipment protection level Ga or Gb (IEC);

c) Approved as being intrinsically safe, type i, ia, or ib;

d) Approved as being flameproof (marking “EEx d”);

e) Approved as being increased safety (marking “EEx e”);

f) Approved as being oil immersed (marking “EEx o”);

g) Approved as being pressurized (marking “EEx p”);

h) Approved as being powder filled (marking “EEx q”); or

i) Approved as being encapsulated (marking “EEx m”).

2.13 Ensure equipment temperature code classification is appropriate for the installation. See Table 12-1.

2.14 Ensure that equipment is suitable for the applicable gas group.

2.15 Increased safety e motors shall incorporate thermal protection.

2.16 Lighting fixtures shall be provided with guards to prevent damage or shall be built of break resistant construction.

Table 12-1 : Hazardous Area Temperature Codes

Temperature Code	Maximum Surface Temperature
T1	450°C
T2	300°C
T2A	280°C
T2B	260°C
T2C	230°C
T2D	215°C
T3	200°C
T3A	180°C
T3B	165°C
T3C	160°C
T4	135°C
T4A	120°C
T5	100°C
T6	85°C

Notes:

1. If the equipment is installed in a higher ambient than the rated ambient, then the actual surface temperature will be higher than the above marked ratings for the full load operating condition. The designer must ensure that this does not compromise the safety.
2. The minimum ignition temperature of the gas should be greater than the Temperature Code rating.

12.3.3 Class I, Zone 2 Locations

1. Hazard:
   - 1.1 An explosive gas mixture is not likely to occur in normal operation, and if they do occur, they will exist for a short time only.
   - 1.2 Common areas are locations adjacent to Class I Zone 1 locations from which explosive gas mixtures could be communicated.
2. Zone 2 Installation Requirements:
   - 2.1 Transformers, capacitors, solenoids and other winding type equipment that do not incorporate sliding or make and break type contacts, heat producing resistance elements and arcing or spark producing elements are permitted for use in Zone 2 locations.
   - 2.2 Non-classified enclosures are permitted for use in Zone 2 provided they contain:
     - a) Non-arcing connections and connecting devices like joints, splices, etc. (non-sparking type)
     - b) Load break isolating switches interlocked to load break contactor or breaker.

c) Not more than ten sets of approved fuses; or

d) Not more than 10 lighting circuit breakers that are not used as switches.

2.3 Cable glands shall be of sealing type, and suitable for Class I Division 1, Division 2 or Zone 0, 1, or 2.

2.4 Wiring method shall be threaded rigid metal conduit or cables approved for hazardous location with associated cable glands.

2.5 Type TC cables, installed in cable tray is acceptable.

2.6 Armoured cables types TECK 90, ACWU90, ACIC, and copper sheathed RC90 with PVC overall jacket are acceptable.

2.7 All boxes, enclosures, fittings shall be threaded type for connection to conduit and cable glands.

2.8 All fittings between the conduit seal and the explosion proof rated enclosures must be explosion proof type only to contain any explosion and withstand same pressures built up in the enclosure.

2.9 Splices and taps shall not be located in fittings which are only compound filled (non-pressure withstand).

a) Any single conductor metallic armoured cable in Zone 2, carrying > 400 A is a possible ignition source due to high magnetic field and consequent energy available in the cable:

i. Bond metallic armour of single conductor cables every 1.8 m, so as to equalize the field (sheath voltage) between them and prevent any sparks due to sheath voltage difference between the cables.

ii. PVC jacketed single conductor armoured cable should be bonded only in the hazardous area and not at the other end. However there will be a sheath voltage present at the non-bonded end which may be a shock hazard. Bonding at both ends will lead to presence of circulating currents which is an incendive source for ignition.

iii. A separate bonding conductor in parallel with the cable is required to bond both ends of the cable route, at the two enclosures.

2.10 It is preferred to use 3 conductor power cables with balanced loadings on all three conductors to cancel out the magnetic effect on armour.

2.11 Cable trays can be used in Zone 2 locations, however they should be bonded to prevent occurrence of circulating currents.

2.12 Conduits shall be sealed when crossing Zone 2 boundaries to prevent migration of gas vapours into other areas.

2.13 Electrical equipment that can be used in Zone 2 shall be:

a) approved for Class I, Division 2 locations;

b) approved as non-incendive;

c) approved as providing equipment protection level Ga, Gb, or Gc;

d) approved as providing a method of protection “n”; or

e) equipment permitted in Zone 1.

2.14 Ensure equipment temperature code classification is appropriate for the installation. See Table 12-1.

2.15 Ensure that equipment is suitable for the applicable gas group.

2.16 Increased safety e motors shall incorporate thermal protection.

2.17 Lighting fixtures shall be provided with guards to prevent breakage damage or be break resistant construction.

13 ARC FLASH HAZARD STUDY

13.1 General

Refer to Appendix A - Arc Flash Hazard Study and Electrical System Modeling Requirements

The purpose of an Arc Flash Hazard Study is to identify and quantify potential arc flash hazards associated with electrical distribution equipment, and establish safe working guidelines for personnel. The safe working guidelines consist of identifying arc flash protection boundaries and the personnel protective equipment (PPE) required for each piece of electrical equipment. The available arc flash energy information is identified on a label, which is to be applied to each piece of electrical equipment. Safe working guidelines and PPE requirements are referenced to these labels.

The Arc Flash Hazard Study is to be performed in association with a short circuit study and protection device coordination study. Results of the short circuit study are used to determine the available fault current levels at each piece of equipment and to specify equipment interrupting and withstand capacities. Results from the coordination study determine the time required for the electrical circuit protective devices to clear the fault condition. The results of these two studies are combined to calculate the incident energy at assigned working positions from the electrical equipment and categorize the arc flash hazard to determine the required PPE to provide adequate protection. These studies should be completed and accepted by the City at design time so as to identify and mitigate any potential issues.

The City has standardized on Power*Tools software provided by SKM Systems Analysis, Inc. (also known as SKM PTW). A model of the electrical distribution should be created using this software that includes any equipment that may need to be accessed by City personnel. Tag equipment within the model using the City of Winnipeg WWD Identification Standard. The SKM PTW project and library files shall be supplied to the City, in native electronic format, upon completion of the Arc Flash Hazard Study.

13.2 Design Requirements

1. All new and modified electrical designs shall ensure that arc flash energies are within the ratings specified in Table 13-1.
2. The electrical designer shall model the arc flash energies during design time and specify equipment as required to ensure that the design arc flash ratings are maintained.

Table 13-1 : Arc Flash Design Requirements

Equipment	Arc Flash Hazard / Risk Rating		Notes
	Recommended Maximum	Absolute Maximum (See Note 1)	
Control Panels, <= 600 V	0	1	
Distribution Panel, <= 600 V	2	3	
Distribution Panel, <= 600 V, Main Breaker	3	4	2
Motor Control Centre, 600 V	2	3	
Motor Control Centre, 600 V, Main Breaker	3	4	2
Panelboard, 208/120 V	0	2	
Panelboard, 347/600 V	1	2	
Switchgear, <= 600 V	3	4	
Switchgear, <= 600 V, Main Breaker	4	4	
Switchgear, Medium Voltage	3	4	
Switchgear, Medium Voltage, Main Breaker	4	4	
Transformers	4	-	3

Notes:

1. The City must approve all cases where the arc flash energies exceed recommended maximum values.
2. The main breaker must be in a separate compartment to permit a separate rating.
3. It is not typical to require live work on energized transformers.

13.3 Typical Arc Flash Labels

1. Arc flash labels are to utilize metric units.
2. Certain types of equipment, such as transformers, contain multiple voltage levels. The arc flash incident energy needs to be evaluated at all voltage levels present and the highest incident energy computed will need to be shown on the arc flash label. The approach distances on the labels must always reflect the highest voltage level present within the equipment, regardless of which voltage level generates the highest incident energy.

The arc flash label format used for equipment rated Category 0 through Category 4 is shown in Appendix A Figure 2.9-1 and Figure 2.9-2.

14 GROUNDING

14.1 General

1. See Section 3.8 for system grounding requirements.
2. Reference IEEE-142 and IEEE-399 for grounding system design practices.
3. All grounding and bonding are to utilize stranded copper conductors.
4. All ground rods to be copper-clad steel, 19mm diameter, and minimum 3m long. Where six meter long ground rods are required, utilize two 3m long rods with a threadless connector.
5. Minimum grounding conductor size for grounding electrode and buried conductors:
   - 5.1 600 V systems: 2/0 AWG
   - 5.2 Medium Voltage systems: 4/0 AWG
   - 5.3 Grounding conductor sizing for connection of transformers, generators, etc. should not be less than required for the equivalent bonding conductor, and never less than 6 AWG.
6. Burial depth of grounding conductors:
   - 6.1 600 V systems: 300 mm – 500 mm
   - 6.2 Medium voltage systems: 500 mm below rough grade

14.2 Equipment Bonding and Grounding

This refers to the bonding and grounding of non-current carrying metal parts like panel enclosures, motor frames, switchgear, and switchyard structures, etc.

14.2.1 General

1. All non-current-carrying metal equipment parts shall be bonded to station ground grid.
2. All metal building columns shall be bonded and connected to ground using 2/0 AWG copper conductors.
3. All tanks, vessels and piping shall be bonded to ground.
4. A grounding system consisting of a grid or network of buried soft drawn bare copper conductors and electrodes will be provided for each facility. The individual ground grid will be tied together with interconnecting ground cables. The grounding system will be designed to limit the overall resistance to earth to a level satisfactory for the safe operation of the equipment and for the safety of the personnel.

14.2.2 Low Voltage Systems (< 750 V)

1. All major electrical equipment rated 1200 A and above, such as transformers, switchgear, large motors, motor controllers, etc., must be connected to the ground, at minimum through two paths.

14.2.3 Medium Voltage System

The following are applicable to medium voltage systems.

1. Prior to detail design execution, the design team must locate and obtain sufficient site soil data, as it is required for calculations and design development. Soil characteristics and seasonal changes must be fully documented. If such data is not available or is insufficient; the project design team shall commission an appropriate soil resistivity survey with a competent and qualified specialized enterprise (SES CDEGS software is preferred).
2. The design of the grounding system shall be based on calculated requirements to maintain safe *touch* and *step* potentials required by the Canadian Electrical Code.
3. Provide a switchyard ground grid in accordance with requirements of IEEE-80 to achieve required touch voltage and step voltage limitations.
4. The minimum grounding conductor size for connection of grounding electrodes and ground grids is 2/0 AWG. The use of 4/0 AWG or larger conductors is recommended to be utilized for applications with transformers rated 1 MVA or greater.
5. All electrical equipment frames shall be connected to ground grid using 2/0 AWG or larger copper conductors.
6. All metal columns, pedestals, supports shall be bonded and connected to ground using 2/0 AWG copper conductor.
7. Provide ground grid conductor around the building perimeter, to reduce touch and step potentials, unless it can be demonstrated with study/analysis that this will not be an issue.
8. The type of power system grounding selected must be in accordance with the Manitoba Hydro and CEC requirements. Values of resistivity to ground must be carefully measured and recorded to provide the most suitable equipment protection.
9. All medium voltage electrical equipment will be connected to the ground, at minimum through two paths.
10. All metallic fencing; property perimeter, outdoor substations and any other, required to protect property, equipment or to restrict access to designated plant facilities will be connected to an appropriate grounding system.
11. Metal fencing around medium voltage stations:
    - 11.1 Locate fence at least 1m inside the periphery of the station ground grid conductor.
    - 11.2 Connect the fence to station ground grid in accordance with CEC.
    - 11.3 Where there is an external metal boundary fence, in proximity to the station fence, the touch voltages within 1m of all parts of the metal boundary fence shall not exceed the tolerable step voltage limits given in CEC Table 52.

14.3 Lightning Protection

Perform a risk analysis as per NFPA 780 for all new facilities. Review acceptable risks with the City. Where required, install appropriate lightning protection.

A minimum level of lightning protection, as required by local codes, shall be allowed for to protect property, personnel and equipment. Subject to the results of an evaluation, the complexity of the design required shall depend on the severity or level of incidence of lightning strokes in the area of the project plant; as well as the type of plant and risks in the event of lightning strokes. Statistical or statutory meteorological data must be consulted to make a proper determination of the degree of protection required.

Buildings and structures will be adequately grounded to prevent damage from a lightning stroke or discharge. In the absence of project specific standards, the design will follow NFPA 780 and CSA B72.

Ensure that the grounding system for the lightning protection is segregated from the electrical safety ground system and only interconnected as required in the codes and standards.

14.4 Grounding Study

1. As per Canadian Electrical Code requirements, appropriate review and calculation of the ground resistance is required for medium voltage systems. However, for certain applications with high voltages, more formal, documented analysis in the form of a grounding study is required to identify grounding system safety hazards and provide for a safe grounding system design.
2. A grounding study report shall be provided for all systems where line-to-line voltages exceed 7500 V within the City's electrical distribution system. A grounding study shall include the following:
    - 2.1 Identify the existing and proposed electrical grounding and bonding.
    - 2.2 Testing of the soil resistivity.
    - 2.3 Test results of any fall-of-potential testing performed on any existing ground electrodes. The requirement for testing existing electrodes shall be determined on a case-by-case basis.
    - 2.4 Coordinate with the utility to obtain relevant utility supply information.
    - 2.5 Determine the available fault currents at various points within the electrical distribution. This information may be obtained from a short circuit study.
    - 2.6 Create a model of the grounding system in specialized grounding software (SES CDEGS is the preferred software). Alternately, manual calculations may be utilized for small systems.
    - 2.7 Perform a safety analysis utilizing the software model (or manual calculations for small systems).
    - 2.8 Fully document the results of the safety analysis in the report.

This page is intentionally blank.

15 POWER QUALITY

15.1 General

1. All designs and installations shall include equipment specifically designed to control and remove all adverse power quality conditions that could damage or impair function of any of the electrical or electronic equipment, which will be in use in the facilities. Adverse power quality conditions to be addressed include but are not limited to:
   - 1.1 Voltage surges;
   - 1.2 Voltage sags;
   - 1.3 Voltage transients;
   - 1.4 Harmonics;
   - 1.5 Power factor;
   - 1.6 Radio frequency interference; and
   - 1.7 Manitoba Hydro Power Quality Standard PQM-2000.

15.2 Power Factor Correction

1. Unless otherwise specified, it is generally recommended that the electrical power factor for each facility be corrected to 0.95 or better. However, the economic payback for power factor correction should be calculated for all cases where the requirement for power factor correction is not clear.
2. Correction of the power factor to past 0.95 leading shall not be permitted under any circumstance.
3. For small facilities with a limited number of loads, power factor correction connected to the individual motor loads is preferred. For example, connection of capacitors to motor loads is appropriate in most wastewater lift stations.
4. For facilities supplied at 600 V, with numerous motor loads and potential harmonics, connection of one or more automatic power factor correction banks is preferred. Perform a harmonic review of the existing and potential future installation, and install detuning capacitors if potentially damaging harmonics are present.
5. Ensure that capacitors do not create a resonance condition.
6. Where any point in the electrical distribution has non-linear loads exceeding 15% of the upstream transformer capacity, a harmonic study must be performed to determine the appropriate application of power factor correction.
7. Capacitors connected directly to the bus without an upstream contactor require special permission from the City.
8. For facilities supplied at medium voltage, the appropriate configuration of power factor correction shall be based upon Table 15-1.
9. Switching and control of power factor correction equipment shall be given special attention. The transient and dynamic behaviour of this equipment under various operating conditions must be supported by calculations and studies documented with reports provided and incorporated into O&M information. The design adopted shall ensure safe operation and protection of associated equipment.

15.3 Application Requirements and Configurations

1. The configuration of power factor correction is classified into three types:
   - 1.1 Load Power Factor Correct (See Section 15.3.2)
   - 1.2 Decentralized Bulk Power Factor Correction (See Section 15.3.3)
   - 1.3 Centralized Bulk Power Factor Correction (See Section 15.3.4)
2. Typical configurations for power factor correction are identified in Table 15-1. However, determination the appropriate configuration shall be reviewed for each facility.

Table 15-1 : Power Factor Correction Application Requirements

Application	Requirement	Typical Configuration	Notes
Land Drainage / Underpass Pumping Station	Based upon Economic Evaluation	Load Power Factor Correction	
Regional Water Pumping Station	Required	Load Power Factor Correction (MV) Decentralized Bulk Power Factor Correction (600 V)	
Flood Pumping Station	Based upon Economic Evaluation	Load Power Factor Correction	Review the economic benefit considering occasional use.
Wastewater Lift Station	Based upon Economic Evaluation	Load Power Factor Correction	
Flood and Wastewater Lift Station (combined)	Based upon Economic Evaluation	Load Power Factor Correction	
Wastewater Treatment Facility	Required	Decentralized Bulk Power Factor Correction (preferred) or Centralized Bulk Power Factor Correction	
Water Treatment Plant	Required	Decentralized Bulk Power Factor Correction (preferred) or Centralized Bulk Power Factor Correction	

3. Wastewater treatment plants shall be designed to have a power factor target of 0.95. The design shall ensure that the average power factor over the worst load day shall never be less than 0.92 lagging.

15.3.2 Load Power Factor Correction

The power factor correction equipment may be installed close to the load equipment exhibiting poor power factor, to improve the power factor, reduce load cable currents and losses, and provide for starting kVAR for heavy loads which require heavy inductive kVAR at start.

1. Before applying power factor correction, the power factor, actual load current, individual harmonic components of individual loads and the power supply source need to be reviewed.
2. Power factor correction capacitors may be installed and switched in line with motors ensuring that such a design is in compliance with Canadian Electrical Code.
3. Capacitors should not be installed at the terminals with larger size AC induction motors with high inertia loads due to risk of self-excitation, after the motor is switched off. Self-excitation may lead to presence of over-voltages at motor/capacitor terminals. The capacitor rated current should be less than the no-load magnetizing current of the induction motor.
4. Individual Motor Power Factor Correction

    4.1 Connection Type A1 – Motor Terminals

    a) Connection of power factor correction capacitors at the motor terminals is acceptable for full voltage started motors only.

    b) Do not apply to motors started by soft starters or VFDs.

    c) Do not apply to motors which are subject to plugging, jogging, high-inertia, reversing, or open transient compound starting.

    d) Maximum capacitor size as per motor nameplate or such that capacitor current <= motor no-load current.

    e) The overload setting must be adjusted to account for the reduced motor current. This reduced overload setting must be clearly documented on the drawings.

    4.2 Connection Type A2 – Overload Load Terminals

    a) Same as Connection Type A1, except the capacitors may be located at the motor starter instead of the motor.

    4.3 Connection Type B1 – After Contactor and Before Overload

    a) Connection of power factor correction capacitors in this manner is acceptable for full voltage started motors only.

    b) Do not apply to motors started by soft starters or VFDs.

    c) Do not apply to motors which are subject to plugging, jogging, high-inertia, reversing, or open transient compound starting.

    d) Maximum capacitor size as per motor nameplate or such that capacitor current <= motor no-load current.

    4.4 Connection Type B2 – Overload Cancelled

    a) Same as Connection Type B1, except the power factor correction conductors are routed back through the overload CTs to cancel the PFC current and allow the overload setting to match the motor FLA.

    4.5 Connection Type C – Separate Contactor

    a) Connection of power factor correction capacitors in this manner is acceptable for most motors.

    b) Do not apply to motors started by VFDs.

    c) Capacitor size should be less than the motor kVAR rating. Note that the capacitors in this configuration may be slightly larger than the previous connection types.

d) When configured with a soft start, the capacitor contactor should only close after the motor is up to speed.

5. VFDs

   5.1 Capacitors are not typically required to provide displacement power factor correction, but rather to filter harmonics.

   5.2 Capacitors should never be applied to VFDs without appropriately designed filtering reactors.

6. For smaller facilities, such as wastewater lift stations and flood stations, where harmonics are present install detuning reactors on individual capacitors.

15.3.3 Decentralized Bulk Power Factor Correction

The power factor correction equipment may be installed in various locations in a facility on busses such as motor control centers and switchgear. The primary advantage of this arrangement compared to centralized bulk power factor correction is that the power factor correction can reduce feeder currents and associated losses within the facility.

1. Before applying power factor correction, the power factor, actual load current, individual harmonic components of individual loads and the power supply source needs to be reviewed.
2. Provide detuned power factor correction banks whenever harmonic currents are present or may arise in the future.
3. Capacitor banks shall be designed in steps to prevent electrical resonance. Each step will be controlled based on desired power factor setting.
4. Provide a programmable PF/VAR controller with adjustable/programmable settings so as to control the centralized capacitor bank.
5. All components in each automatic power factor correction cabinet will be designed to accommodate an additional 20% of the initial kVAR capacity in the future.

15.3.4 Centralized Bulk Power Factor Correction

The Centralized Bulk Power Factor Correction utilizes capacitor banks that are installed close to the power source. Its primary aim is to improve overall facility power factor. Reduction in the facility power factor provides for reduced demand billing, release of capacity from a loaded supply transformer, and reduction in upstream transformer and cable losses. Power factor correction can also assist with voltage stabilization.

1. Before applying centralized bulk power factor correction, a proper electrical study shall be carried out to study the kVA, kVAR, power factor, actual load current, individual harmonic components at the given power source.
2. Calculate the maximum kVA capacity that can be released by using centralized PF capacitor banks instead.
3. Provide detuned power factor correction banks to prevent providing a low impedance path for harmonic currents that are present or may arise in the future. Detuned power factor correction banks shall be considered as standard and justification, with approval of the City, shall be required for elimination of this requirement.
4. Capacitor banks shall be designed in steps to prevent electrical resonance. Each step will be controlled based on desired power factor setting.
5. Provide a programmable PF/VAR controller with adjustable/programmable settings so as to control the centralized capacitor bank.

15.4 Capacitor Units

1. Oil-filled capacitors are not acceptable. Provide metalized polypropylene dielectric thin film impregnated self-healing capacitors.
2. Capacitance tolerances to be within -5% to +10%.
3. Ampacity of feeders supplying capacitors shall be 135% of the rated capacitor current.
4. Rated voltage of the capacitors shall be 110% of the system nominal voltage.
5. Rated over-current capability of capacitors shall be 135% of the nominal.
6. Capacitors shall be provided with integral discharge devices complying with Code requirements for residual voltage decay. Decay time shall be marked as a warning label on a cover protecting the terminals.
7. Capacitors shall be provided with integral fuses, coordinated to prevent the capacitor case from bursting on a short circuit fault inside the capacitor case.
8. The capacitive power overload of a capacitor due to overload in voltage or current must not exceed 135% of its nominal rated kVAR.
9. Provide capacitor units with low dielectric losses.

This page is intentionally blank.

16 OTHER SYSTEMS

16.1 Fire Alarm System

16.1.1 General Requirements

1. The requirement for a fire alarm system is dependent upon the type of facility and applicable code requirements. Where a fire alarm system is required as part of mandatory code requirements or good design practice, advise the City early in the design process.
2. Fire alarm systems are presently required for (but not necessarily limited to):
   - 2.1 The South End Water Pollution Control Centre
   - 2.2 The Water Treatment Plant
   - 2.3 Regional Water Pumping Stations.
3. Where fire alarm systems are to be installed, install in accordance with the National Building Code of Canada, the Canadian Electrical Code, and CAN/ULC-S524 – *Installation of Fire Alarm Systems*.
4. All fire alarm wiring shall be entirely independent from all other wiring. Each breaker feeding fire alarm equipment shall be coloured red and lockable in the “on” position.
5. The environmental conditions in some process areas are too harsh for commercial grade components to have sufficient operating life. In general, components in process areas should be industrial grade. However, the areas where industrial grade components will be necessary should be determined during the fire alarm design.
6. Each fire alarm device shall have a lamacoid adjacent to the device indicating the device ID as specified in the City’s Identification Guidelines.
7. At minimum, an alarm and trouble signal shall be sent from the fire alarm panel to the main facility control system.
8. The requirement for central monitoring is to be determined on a case-by case basis. Where provided, it shall be installed in accordance with CAN/ULC-S561.

16.1.2 Drawing Requirements

1. Prepare fire alarm plan drawings in accordance with Section 19.2.4.
2. Prepare fire alarm riser diagrams in accordance with Section 19.2.5.

16.2 Voice Communications

The specific requirements for communications systems are dependent upon the scope of work for each project. At minimum, the electrical design shall include provision of space, conduits and/or cabling for the communication systems.

16.2.1 Telephone

1. Hardwired telephone communication infrastructure shall be provided for all facilities that are occupied on a routine basis.
2. Utilize analog telephone systems for small to medium sized facilities.
3. Utilize IP based telephony for all large facilities, including wastewater treatment facilities.
4. Allocate space for the central telephone backboard in a clean, conditioned space. For large facilities, this will ideally be in a server room or similar environment. For smaller / medium sized facilities, preference would be to typically locate in an electrical room, but at least 1m away from electrical equipment.
5. Provide boxes and wallplates with jacks for all telephone connections.
6. All cabling is to be as per Data Communications requirements in Section 16.3. No “Cat-3” or telephone-grade cabling is permitted.

16.2.2 Public Address (PA) System

1. The requirement for a PA system will be made on a case-by-case by the City, however it is expected that only large facilities will typically require a PA system.

16.3 Data Communications

16.3.1 Cabling

1. Copper data cabling in wastewater lift stations, regional water pumping stations, and other small to medium sized facilities may utilize Cat-5e wiring systems. Utilize Cat-6 wiring systems for larger facilities, such as wastewater treatment facilities.
2. Utilize multi-mode fibre-optic cabling where required due to distance or potential electrical interference
   - 2.1 Fibre optic cables shall be indoor/outdoor direct burial rated loose tube, rodent protected and constructed with 50/125 multi-mode glass fibres, spiral interlocked armour, and outer polyethylene jacket.
   - 2.2 All fibre cables are to meet TIA 492-AAAC (OM3) designation at minimum. Where required for distance and bandwidth, TIA 492-AAAD (OM4) fibres may be required.
   - 2.3 All fibre terminations are to include buffer tube fan out kits, connectors, termination/distribution panels, and wall mount enclosures.
   - 2.4 Where possible, standardize on LC fibre connectors.
3. Utilize single-mode fibre for long distance communication requirements.
4. All communication cables shall be supported at intervals not exceeding 1.0 m.

16.3.2 Raceways

1. Communication conductors shall be installed in separate raceways and cable trays from power conductors.
2. Where communication conductors cross power conductors, they shall cross perpendicularly.
3. Segregation of cable systems shall be as per Table 4-9.

16.4 Security Systems

16.4.1 Basic Requirements

1. Each facility shall, at minimum, be provided with basic security monitoring; however additional requirements may apply. Coordinate with the City to determine the specific requirements for each facility.

16.4.2 Wastewater Treatment Facilities

1. The basic security system for all process areas, consisting of door, window and motion sensors as applicable, will typically be connected with the process control system rather than a commercial-style security system. Video systems will be treated independently of the security systems connected to the process control system. Refer to the Automation Design Guide for additional information.
2. Basic requirements include:
   - 2.1 Intrusion monitoring for all exterior plant doors.
   - 2.2 Intrusion monitoring for all exterior windows that are not within the plant perimeter fence (if any).
   - 2.3 Motion detectors for critical areas only.
3. Video surveillance systems for security purposes are not typically required unless indicated by the City; however video monitoring of specific processes and operations may be required.
4. For NEWWPCC, please refer to WSTP NEWPCC Access Control Guideline

This page is intentionally blank.

17 PACKAGED SYSTEMS

17.1 General Requirements

Various process and mechanical equipment may be appropriate for packaging, where the equipment vendor provides a complete package, including electrical and automation equipment. For automation system packaging requirements, please refer to the Automation Design Guideline.

1. Vendor packaging of electrical equipment with the process equipment is permitted where:
    - 1.1 The equipment operation is complex or the technology is proprietary. Vendors of these packaging systems must be able to provide a complete proven system that can be fully tested at the factory. The vendors of these systems must provide assistance with the integration of the City's PCS system and the vendors control system, such that from the City Control Room the operator has visibility and control of the vendors packaged equipment.
    - 1.2 Where vendors are providing packaged equipment, should try and utilize City standardized equipment.
2. Vendor packaging of general building HVAC systems is permitted where:
    - 2.1 The packaged unit is dedicated to a non-process area such as a laboratory or Administration Building
    - 2.2 Vendor does not have to adhere to City standardized equipment
    - 2.3 Vendor must provide a suitable communication between the packaged unit and the PCS system to allow City Operations to monitor the unit's performance, adjust temperature and humidity set points, start/stop the unit, reset the unit on a fault and provide detailed alarms to the PCS on unit failure.
3. This section is still under development

Table 17-1 : Wastewater Treatment Equipment Vendor Packaging

Equipment	Permitted Packaging Type				Comments
	1	2	3	NP	
Air Handling Unit - General	Y	Y	Y		Application dependant
Air Handling Unit with Fan Wall		Y	Y		Application dependant
Air Handling Unit – NG Fired	-	Y	Y		Application dependant
Blowers - Turbo	Y	Y	Y	-	Application dependant
Blowers – conventional					
Clarifier Mechanism - Rotary	-	Y	Y		
Compressor, Air, <= 3.7 kW	Y	Y	Y		
Compressor, Air, > 3.7 kW	-	Y	Y		
Compressor, Digester Gas	-	-	Y		
Grit Classifier	-	-			
Fan - General	-	-	-		
Mixers, Tank	-	-	-		
Pump – Chemical Feed Pump					
Pump - General					
Rotary Drum Thickener		Y			
Screens – Perforated Plate					
UV System	Y				
Legend					
Packaging Type 1		Black Box			
Packaging Type 2		Standards except standardized equipment vendors			
Packaging Type 3		All standards including standardized equipment vendors			
Packaging Type NP		Not Permitted			

Note:

1. Packaging of equipment may be in accordance with Table 17-2 where the equipment is part of a system.

Table 17-2 : Wastewater Treatment System Vendor Packaging

Equipment	Permitted Packaging Type				Comments
	1	2	3	NP	
Biofilter / Odour control system	-	-	Y		
High Rate Clarifier - Actiflo®	-	-	Y		
Polymer Mixing System	-	-	-		TBD
Thermal Hydrolysis Process - Cambi®	-	-	-		TBD
Legend					
Packaging Type 1		Black Box			
Packaging Type 2		Standards except standardized equipment vendors			
Packaging Type 3		All standards including standardized equipment vendors			
Packaging Type NP		Not Permitted			

18 ELECTRICAL ROOMS

18.1 General Requirements

Requirements of electrical rooms include the following:

1. Ensure bare concrete floors are covered, painted, or sealed to reduce the build-up of concrete dust on electrical equipment. Use of conductive surface hardeners for concrete floors is not permissible.
2. Locate electrical rooms a minimum of 150mm above outdoor grade level.
3. Where electrical rooms are subject to potential flood risk from a nearby process upset, locate the electrical room a minimum of 100 to 150 mm above the process floor level, or higher as required, to prevent a process flood incident from flowing into the electrical room.
4. Locate electrical rooms to allow for access of cables and conduits from all sides.
5. No process piping shall run through the electrical room.
6. No washroom or kitchen facilities shall be allowed directly above an electrical room.
7. Hot water or glycol heating pipes or heaters shall not be located above electrical rooms or anywhere such that a leak of liquid or steam could conceivably enter an electrical room.
8. Evaporating coils for air handling units will be located and arranged to prevent condensation from running onto electrical equipment in the event of a plugged drain.

9. Housekeeping pads:

   9.1 It is generally preferred that electrical equipment be installed on housekeeping pads. Housekeeping pads are required in any application where there is potential for water leakage on the floor.

      a) Housekeeping pads may be omitted where not compatible with certain types of draw-out switchgear.

   9.2 Size housekeeping pads to extend 50mm past the equipment.

   9.3 Housekeeping pads to be between 110 and 152 mm high.

   9.4 Provide rebar as structurally required.

18.2 Space and Location Requirements

1. Design new electrical rooms to provide a minimum of 25% usable floor space not allocated to installed equipment, O & M information, tools, spare parts, related safety equipment at the end of the project. In addition, a minimum of 10% of usable wall space shall be spare after all associated electrical single line drawings (D sized) are mounted on the walls. This space provision shall not be utilized for equipment that only becomes defined as the project progresses.

Note: A common issue is that not all the electrical and automation equipment are known at the time of electrical room sizing. Electrical room sizing at the preliminary design stage may need to be 150 – 200% of the size required for the equipment known at this stage. Consider undefined requirements at the time of electrical room sizing.

2. Design new electrical rooms to be sufficiently close to loads to prevent excessive feeder lengths. This may require the provision of multiple or additional electrical rooms.

   2.1 Ensure VFD motor lead length limits in this document and manufacturer's recommendations are adhered to.

18.3 Redundancy Requirements

1. Where electrical distribution redundancy is required, separate each bank of the electrical distribution, with a minimum of a 2-hour rated fire separation for:

   1.1 All medium voltage distribution systems with a bus rating of 10 MVA or greater.

18.4 Ventilation Requirements

1. Design ventilation and mechanical cooling as required to keep electrical rooms cool. Minimum requirements are as per the Mechanical Design Guide.

Table 18-1 : Electrical Room Temperature Requirements

Type	Heating		Cooling	
	Occupied	Unoccupied	Occupied	Unoccupied
Standard	18°C	10°C	26°C	26°C
Small & Non-Critical	18°C	10°C	35°C	35°C

Note: Electrical Rooms may only be considered small if they distribute power for less than 100 kVA of load. Electrical rooms may only be considered non-critical if the loads powered from the room can be turned off at any time for a complete day with minimal consequence. An example of a small electrical room would be an electrical room for a small storage building.

2. Perform a heat load calculation for electrical rooms to ensure the ventilation system is adequately sized to reject the heat.
3. Where air quality is a concern, ensure that the electrical room is positively pressurized relative to surrounding areas. Pressurization is required in any area containing hazardous locations.
4. Ensure that electrical rooms maintain a G1 – Mild classification as per ISA 71.04. Where required, install a scrubber to address corrosive gases.
5. Ensure sufficient ventilation is provided to exhaust any potential hydrogen off-gas from batteries.
6. Filters are required on the air intake of all electrical rooms.
7. Humidity control may be required if electrical equipment within the room is sensitive to this or if environmental conditions warrant it.

19 ENGINEERING DESIGN TEAM RESPONSIBILITIES

19.1 General

1. Responsibility for deliverables
   - 1.1 All drawings and other deliverables related to a design are the responsibility of the design engineer.
2. All electrical deliverables are to be sealed by a qualified professional engineer registered in the Province of Manitoba.
3. Completeness of drawings:
   - 3.1 All drawings shall be comprehensive in nature to allow for effective use in construction and maintenance. For example: partial single line drawings are not permitted.
4. Update of existing drawings:
   - 4.1 If the project is an addition, expansion, upgrade or modification to an existing site or facility, existing drawings may require up-dating.
     - a) Single line drawings must always be updated, such that a complete set of single line diagrams is provided for the facility.
     - b) Panel schedule drawings must always be updated, such that a complete set of panel schedules is provided for the facility.
     - c) Update of existing motor starter schematics and loop diagrams is required, wherever changes are being made to the content of the specific drawings.
     - d) The update of existing electrical plan drawings to reflect new work is not typical, and is not required unless specifically identified by the City.
     - e) The update of other existing electrical drawings is dependent upon the design engineer's scope of work, as agreed to with the City.
5. As-Built Drawings:
   - 5.1 All electrical deliverables shall be updated to "as-built" status at the end of the project. The "as-built" documents shall incorporate Contractor mark-ups, inspections performed by the design team, change orders, RFIs, and other communication between the Contractor and Design Team.
   - 5.2 Unless otherwise specified by the City, as-built drawings will not be sealed (Otherwise known as record drawings).
6. External, 3rd Party Consultants:
   - 6.1 Expertise and assistance may be required, from external 3rd party specialized consultants, outside of the primary electrical design team.
   - 6.2 Areas where an external 3rd party consultant may be utilized, with permission from the City, are:
     - a) Analysis and design of grounding system.
     - b) Design of project specific specialized systems and equipment.
     - c) Medium-voltage protection systems.
     - d) Fire detection, protection and alarm systems.
     - e) Corrosion protection systems.
     - f) Area classification.

6.3 The design team shall be responsible for monitoring the activities and progress of each 3rd party consultant.

6.4 It is the responsibility of the design engineer to ensure that the deliverables follow all City standards and guidelines.

7. Site Visits:

7.1 The electrical design team is responsible for ensuring that a sufficient number of site visits occur to facilitate the understanding of specific field conditions or status of existing facilities and equipment.

8. Demolition Requirements

8.1 It is generally required that the design engineer is responsible for associated demolition works required to implement the scope of work. Clearly indicate all demolition requirements on the drawings and in the specifications. Specific requirements include:

8.2 Where demolition requirements are significant, create dedicated demolition drawings.

8.3 Generally, abandoned equipment, wiring, etc. shall be removed unless specifically requested by the City that the equipment/wiring be retained, or removal is not practical.

9. Acceptance Testing

9.1 Acceptance testing requirements shall be defined for every project. Acceptance tests shall utilize NETA standards as a reference.

9.2 Acceptance testing forms shall be completed for every project and included with the O&M manuals.

9.3 The Design Team is responsible for reviewing the completed acceptance test forms to ensure that the installation complies with the specifications.

19.2 Drawings

The drawing requirements in this section are not exhaustive, but indicate general requirements for all projects, as applicable to the scope of work in the project. The electrical drawings produced shall be comprehensive to cover the scope of the project, and shall be detailed to an “industrial” level of detail. “Commercial-grade” drawings that have excessive use of “typical” and a general lack of detail are not acceptable.

19.2.1 Cable Tray Layouts

1. Requirement

1.1 Cable tray layouts are required for all work that includes cable trays.

2. Content:

2.1 All new and existing cable trays shall be shown, to scale, on the layout.

2.2 All potentially interfering mechanical equipment, if applicable, shall be shown with a lighter line weight.

2.3 All relevant equipment identifiers are to be shown on the drawing.

2.4 Provide sections and elevations where sufficient detail cannot be provided in plan.

2.5 Provide 3 dimensional views of the cable tray layouts where required to clarify the layout.

2.6 The requirement to produce cable tray layouts in a 3D model, together with mechanical equipment, shall be evaluated and established on a per project basis.

3. Format:

3.1 All cable tray layout drawings are to be produced on a standard A1 size drawing.

3.2 Drawing Scale:

a) Recommended: 1:30 or 1:50

b) Maximum: 1:75

19.2.2 Electrical Room Layouts

1. Requirement

1.1 Electrical Room Layouts shall be prepared for every project.

2. Content:

2.1 All new and existing equipment shall be shown, to scale, on the layout.

2.2 All mechanical equipment, if applicable, shall be shown with a lighter lineweight.

2.3 All equipment identifiers are to be shown on the drawing.

2.4 Provide sections and elevations where sufficient detail cannot be provided in plan.

3. Format:

3.1 All equipment plan layout drawings are to be produced on a standard A1 size drawing.

3.2 Drawing Scale:

a) Recommended: 1:30

b) Maximum: 1:50

19.2.3 Equipment Plan Layout Drawings

1. Requirement:

1.1 Equipment Plan Layout Drawings shall be prepared for every project.

2. Content:

2.1 All new and existing equipment shall be shown, to scale, on the equipment plan layout.

2.2 All mechanical equipment shall be shown with a lighter lineweight.

2.3 All equipment identifiers are to be shown on the drawing.

2.4 Provide sections and elevations where sufficient detail cannot be provided in plan.

2.5 Show all convenience and welding receptacles with circuiting indicated.

2.6 Show all Public Address (PA) system components.

3. Format:

3.1 All equipment plan layout drawings are to be produced on a standard A1 size drawing.

3.2 Drawing Scale:

a) Recommended: 1:50

b) Maximum: 1:100

19.2.4 Fire Alarm and Security Plan

1. Requirement

   1.1 Fire Alarm and Security Plan Drawings are required for all facilities with a fire alarm and/or security system.

2. Content

   2.1 Prepare plan drawings that show the detailed location and type of each detector, isolator, horn, strobe, pull station, etc.

   2.2 Provide the equipment identifier adjacent to each device. Where the room number is clearly shown on the drawing, the room number portion of the identifier may be implied.

   2.3 All fire alarm spacing shall be designed per CAN/ULC-S524 by the design engineer. Indication of general detection requirements for detailed design by the Contractor is not acceptable.

   2.4 Where flat ceilings are not provided, provide sections or other details to clarify the installation requirements, including installations in beam pockets.

   2.5 Show all security access control systems.

   2.6 Show the routing of major conduits on the plan drawing.

   2.7 Show all isolators.

3. Format:

   3.1 All fire alarm and security drawings are to be prepared on a standard A1 size drawing.

   3.2 Drawing Scale:

      a) Recommended: 1:50 – 1:100

      b) Maximum: 1:150

19.2.5 Fire Alarm Riser Diagram

1. Requirement

   1.1 Fire Alarm Riser Diagrams are required for all facilities with a fire alarm.

2. Content

   2.1 Provide a riser diagram for both the detection system and the notification system. For small systems this may be on a common drawing, but for large systems, these systems should be on separate drawings.

   2.2 Provide the equipment identifier adjacent to each device. Where the room number is clearly shown on the drawing, the room number may be implied.

   2.3 Clearly show all zone, devices, and wiring interconnections between devices.

   2.4 Show all booster power supplies.

3. Format:

   3.1 All fire alarm drawings are to be prepared on a standard A1 size drawing.

19.2.6 Grounding Diagrams

1. Requirement
   - 1.1 Grounding Diagrams are required for all facilities.
2. Content:
   - 2.1 Provide plan and elevation drawings as required to indicate the routing and connection of grounding conductors.
   - 2.2 The drawings are to clearly represent the grounding conductors within the building(s) and the exterior ground electrode layout, as well as interconnections.
   - 2.3 Clearly show the location of all ground electrodes.
   - 2.4 Clearly show conductor material type and size requirements.
   - 2.5
3. Format:
   - 3.1 All grounding diagrams are to be produced on a standard A1 size drawing.
   - 3.2 Drawing Scale - Interior:
     - a) Recommended: 1:50
     - b) Maximum: 1:100
   - 3.3 Drawing Scale - Exterior:
     - a) Recommended: 1:50 - 1:100
     - b) Maximum: 1:150
   - 3.4 Provide details and sections at a lower scale as required to clarify grounding requirements.

19.2.7 Hazardous Location Plan Drawings

1. Requirement
   - 1.1 Hazardous location plan drawings are required for all wastewater facilities, and should cover all floor areas.
   - 1.2 Hazardous location plan drawings are also required for any other facility where a hazardous location is present.
2. Content:
   - 2.1 Plan drawings of the facilities clearly showing the hazardous locations via hatching.
   - 2.2 It is recommended to also show Canadian Electrical Code Category 1 (wet) and Category 2 (corrosive) locations on the same plans via hatching.
   - 2.3 Show temperature codes for hazardous locations.
   - 2.4 For indoor locations where the hazardous classification is related to ventilation, clearly indicate the design ventilation rate on the drawings.
3. Format:
   - 3.1 All hazardous location plan drawings are to be produced on a standard A1 size drawing.
   - 3.2 Drawing Scale:
     - a) Recommended: 1:50
     - b) Maximum: 1:100

3.3 Provide details and sections at a lower scale as required to clarify hazardous locations around equipment.

19.2.8 Lighting Plan Drawings

1. Requirement:
   - 1.1 Lighting Plan Drawings are to be prepared for every project.
   - 1.2 Do not combine the Lighting Plan Drawings with the Equipment Plan Layout Drawings unless specifically approved by the City.
2. Content:
   - 2.1 Include all primary and emergency lighting.
   - 2.2 Include all exit lighting.
   - 2.3 Indicate circuit numbers beside each fixture.
   - 2.4 Indicate all lighting control.
   - 2.5 All lighting plan drawings shall reference a luminaire schedule. Where an existing luminaire schedule exists for a building or building area being modified, the existing luminaire schedule shall be updated and utilized. Avoid multiple luminaire schedules for the same area.
3. Format:
   - 3.1 All lighting plan drawings are to be produced on a standard A1 size drawing.
   - 3.2 Drawing Scale – Interior Drawings:
     - a) Recommended: 1:50
     - b) Maximum: 1:100
   - 3.3 Drawing Scale: - Exterior Drawings:
     - a) Maximum: 1:100

19.2.9 Lightning Protection Drawings

1. Requirement:
   - 1.1 Lightning Protection Drawings are to be prepared for every project with lightning protection.
   - 1.2 Lighting protection drawings may be integrated into the overall grounding diagrams, but shall not be combined with other general rood arrangement drawings unless specifically approved by the City.
2. Content:
   - 2.1 Air terminals height and locations;
   - 2.2 Arrangement of main and down conductors;
   - 2.3 Grounding points and spacing;
   - 2.4 Bonding of roof drawings
   - 2.5 Sizing of conductors;
   - 2.6 Protection of conductors;
   - 2.7 Testing requirements of grounds; and
   - 2.8 Standard details.

3. Format:
   - 3.1 All lightning plan drawings are to be produced on a standard A1 size drawing.
   - 3.2 Drawing Scale (other than standard details):
     - a) Recommended: 1:50
     - b) Maximum: 1:100

19.2.10 MCC Layout Drawing

1. Requirement:
   - 1.1 A MCC layout drawing is required for every MCC.
2. Content:
   - 2.1 The primary content of the drawing is a front elevation of the MCC structure.
   - 2.2 Label all vertical sections with a number starting at 1. Label all horizontal rows with a letter, as per manufacturer identification.
   - 2.3 Each bucket / wrapper shall be sized appropriately and identified with the load equipment identifier and description.
   - 2.4 Label spare units as SPARE and space available for future starters/feeders as SPACE.
   - 2.5 Provide a table with the following MCC design requirements clearly identified:
     - a) Equipment Identifier
     - b) Enclosure Type
     - c) Mounting
     - d) Depth
     - e) Supply voltage, phase, frequency
     - f) Incoming neutral termination
     - g) Control voltage
     - h) Wiring Class
     - i) Minimum bus rating (amps) for horizontal and vertical bus.
     - j) Suitable for service entrance
     - k) Neutral Bus
     - l) Bus Bracing
     - m) SCCR
     - n) Series SCCR Permitted
     - o) Bus Material
     - p) Manufacturer / Model (To be completed at As-Built stage if competitive procurement)
3. Format:
   - 3.1 All MCC Layout Drawings are to be produced on a standard A1 size drawing.
   - 3.2 Drawing Scale:
     - a) Recommended: 1:10

19.2.11 MCC Schedule

1. Requirement:
   - 1.1 A MCC Schedule is required for every MCC.
2. Content:
   - 2.1 Identify in tabular format:
     - b) MCC Identifier
     - c) Description
     - d) Location
     - e) Volts
     - f) Amp Rating
     - g) Phases
     - h) Wires
     - i) Main Breaker
       - i. Rating
       - ii. Type
       - iii. Settings
     - j) Total Connected Load
     - k) Total Demand Load
     - l) Legend
   - 2.2 For each unit within the MCC, provide a row within the table with the following clearly identified:
     - a) Unit Location
     - b) Load Identifier
     - c) Load Description
     - d) Motor Load (kW/hp/FLA)
     - e) Non-Motor Load (kW)
     - f) Starter
       - i. NEMA Size
       - ii. Type
       - iii. Overload
     - g) Circuit Protection
       - i. Rating
       - ii. Type
     - h) Notes
3. Format:
   - 3.1 All MCC Schedules are to be produced on a standard A1 size drawing.

19.2.12 Motor Connection Diagram

1. Requirement:
   - 1.1 A dedicated motor connection diagram shall be prepared for every motor starter.
2. Content:
   - 2.1 The connection diagram will include all power and control field wiring external to the motor starter or control panels. The cables and conductors will be individually labelled along with all the terminations.
   - 2.2 All cable identifiers and sizes / types will be shown on the connection diagram.
3. Format:
   - 3.1 All motor connection diagrams are to be produced on a standard A1 size drawing.
   - 3.2 Space permitting, the Motor Connection Diagrams will be located together with the Motor Starter Schematics, occupying the right side of the drawing.

19.2.13 Motor Starter Schematics

1. Requirement:
   - 1.1 A dedicated motor schematic shall be prepared for every motor starter.
2. Content:
   - 2.1 The schematic will include the power distribution for the motor as well as the complete control circuit including terminal and wiring identification.
3. Format:
   - 3.1 All motor starter schematics are to be produced on a standard A1 size drawing.
   - 3.2 For typical 600 V motors, with minor to medium complexity, it is typical that the motor connection diagram is integrated with the schematic on the same drawing.

19.2.14 PA Riser Diagram

1. Requirement
   - 1.1 Public Address (PA) Riser Diagrams are required for all facilities with a PA system.
2. Content
   - 2.1 Provide a riser diagram that shows the complete details (not typical) for all PA system components.
   - 2.2 Provide the equipment identifier adjacent to each device. Where the room number is clearly shown on the drawing, the room number may be implied.
   - 2.3 Clearly show all zone, devices, and wiring interconnections between devices.
   - 2.4 Show all amplifiers and connections to telecom / network systems.
3. Format:
   - 3.1 All PA Riser Diagrams are to be prepared on a standard A1 size drawing.

19.2.15 Panel Schedules

1. Requirement:
   - 1.1 A dedicated panel schedule shall be prepared for every panelboard and distribution panel.
2. Content:
   - 2.1 The information provided for each panel shall include in tabular format:
     - a) Panel identifier
     - b) Amp rating, volts, phases, wires
     - c) Surface / flush mount
     - d) Top / bottom feed
     - e) Description
     - f) Location
     - g) Manufacturer / Model
     - h) Interrupting Rating
     - i) Main Breaker
     - j) Main Breaker Settings
   - 2.2 Show for each circuit:
     - a) Circuit number
     - b) Load description
     - c) Notes
     - d) Wire size
     - e) Breaker rating
     - f) Load (VA)
     - g) Phase
   - 2.3 Total Connected Load (kVA)
   - 2.4 Total Connected Load per Phase (kVA & Amperes)
   - 2.5 Reference the applicable single line diagram feeding each panel on the drawing.
3. Format:
   - 3.1 All panel schedules are to be produced on a standard A1 size drawing in tabular format.

19.2.16 Power Distribution Switching Diagrams

1. Requirement:
   - 1.1 Power Distribution Switching Diagrams are required for all facilities where the electrical distribution cannot fit on one or two single line drawings.
2. Content
   - 2.1 A Power Distribution Switching Diagram is utilized to represent the overall power distribution of a larger facility on a single diagram, with less detail than a Single Line Diagram. Multiple switching diagrams should be avoided if possible.
   - 2.2 The level of detail on the drawings shall be reduced to a level to allow the entire electrical distribution to be shown. A primary purpose of the drawing shall be to allow electrical maintenance personnel to perform switching. All relevant equipment identifiers associated with switching shall be shown. Include all:
   - 2.3 Switching devices including disconnects fuses, breakers, interlocks, etc.
   - 2.4 Key Interlocks including identification numbers.
   - 2.5 Equipment including transformers, generators, major pumping units, feeders, buses, etc.
   - 2.6 For facilities with medium voltage distribution, it is acceptable to limit the scope of the facility switching diagram to the medium voltage distribution system. Additional switching diagrams may be required for the low voltage distribution systems.
3. Format:
   - 3.1 All switching diagrams are to be produced on a standard A1 or A0 size drawing.
   - 3.2 Orient power flow vertically from top to bottom.
   - 3.3 Where possible without adding complexity to the drawing, orient loads to reflect the physical orientation as seen by someone viewing the equipment from the front.

19.2.17 Security Riser Diagram

1. Requirement
   - 1.1 Security Riser Diagrams are required for all facilities with a security and/or access control system.
2. Content
   - 2.1 Provide a riser diagram for both the detection system and the notification system.
   - 2.2 Provide the equipment identifier adjacent to each device. Where the room number is clearly shown on the drawing, the room number may be implied.
   - 2.3 Clearly show all zone, devices, and wiring interconnections between devices.
3. Format:
   - 3.1 All security riser diagrams are to be prepared on a standard A1 size drawing.

19.2.18 Single Line Diagrams

1. Requirement:
   - 1.1 Single Line Diagrams are critical and shall be prepared for every facility.
   - 1.2 Single line diagrams shall be fully detailed and indicate the full electrical distribution from the source to the load.

2. Content

2.1 Each piece of equipment shall have the equipment identifier shown, as well as major equipment ratings.

a) Equipment ratings to include, but not be limited to voltage and ampere ratings

b) Show short circuit current ratings.

2.2 All medium voltage, 600 V, and 480 V loads shall be shown in detail on the single line diagrams.

a) Underneath each load indicate, in order from top to bottom, Equipment Identifier, description, load ratings

b) Indicate Full Load Amps for motor loads.

i. Utilize reasonable assumed full load currents until actual motor full load amps are known.

c) Update all load ratings (including full load amps) on the as-built drawings.

2.3 Show all mechanical, Kirk key and electrical interlocks.

2.4 Show connected and demand loads at each distribution point.

2.5 Show service and transformer grounding including details and protections associated with neutral grounding resistors.

2.6 Each cable shall have an identifier and cable size/type shown.

2.7 Show calculated arc flash incident energies at all points in the electrical distribution.

2.8 Show all electrical equipment interface connections to a PLC or any other equipment within the Process Control System.

2.9 Any notes or reference drawing information shall be noted on the drawing.

2.10

3. Format:

3.1 All single line drawings are to be produced on a standard A1 size drawing. If a facility cannot fit on a single drawing, utilize multiple drawings, preferably split per process area. See Single Line Overview Drawings for overview drawings

3.2 Orient power flow vertically from top to bottom.

3.3 Where possible without adding complexity to the drawing, orient loads to reflect the physical orientation as seen by someone viewing the equipment from the front. For MCC single line drawings, group loads from the same vertical section of a MCC.

3.4 Partial single line diagrams for renovations are not acceptable.

3.5 All text shall be 2.5mm high unless otherwise specified.

3.6 Arc flash incident energies shall be shown in an octagon, with two lines of text:

3.6.1 The first line: “I.E.” representing incident energy (2.0 mm high text); and

3.6.2 The second line “12.3” where 12.3 is the calculated incident energy in cal/cm^2 in 2.5 mm high text.

3.7 Show all electrical equipment interface connections to the PCS as a dashed line to a diamond, 10 mm wide by 10 mm high, with “PCS” in the diamond. The dashed line may represent multiple signals. The text may be 2.0 mm or 2.5 mm high as appropriate.

19.2.19 Switchgear Three-Line Diagram

1. Requirement:
   - 1.1 A switchgear three-line diagram shall be prepared for any switchgear containing PTs or CTs and associated protection or metering.
2. Content:
   - 2.1 A Switchgear Three-Line Diagram is utilized to represent the power distribution and associated protection and metering for power distribution switchgear.
   - 2.2 The appearance of a Three-Line Diagram is similar to a single Line Diagram, except each phase conductor is shown, along with all CTs, PTs, CPTs, and other protection and metering devices.
3. Format:
   - 3.1 All three-line diagrams are to be produced on a standard A1 size drawing.
   - 3.2 It is useful to contain some level of correlation in the arrangement to the actual physical orientation of the switchgear and the single line diagram.

19.3 Other Documents

19.3.1 Cable Schedule

1. Requirement:
   - 1.1 A cable schedule is required for every project.
2. Content:
   - 2.1 All power and control cables shall be uniquely identified on the cable schedule. Cables shall not be entered as typical.
   - 2.2 Where individual wires are routed in conduit, the wires shall be identified as an item in the cable schedule. This is not applicable for minor circuits, such as lighting, receptacles, etc.
   - 2.3 The cable schedule shall include the following fields:
     - 2.3.1 Cable Identifier
     - 2.3.2 Cable Type (e.g. 3C, 250 kcmil, TECK90, 1000 V)
     - 2.3.3 From
     - 2.3.4 To
     - 2.3.5 Spacing (0 – 100% applicable to cables in tray)
     - 2.3.6 Length (Estimate)
     - 2.3.7 Routing (Brief description)
     - 2.3.8 Notes
   - 2.4 The length for each cable shall be estimated at design time to within ~10% accuracy for purposes of pre-bid cost estimating and electrical system modelling.
3. Format:
   - 3.1 A cable schedule will typically be prepared in Microsoft Excel, but other formats may be accepted by the City with approval.

19.3.2 Lamacoid Schedule

1. Requirement:
   - 1.1 A lamacoid schedule is required for every project.
   - 1.2 It has been noted that the creation of a lamacoid schedule at design time greatly assists the Contractor, helps provide a higher quality of identification lamacoids for maintenance personnel, and can be created for a minimal effort above that required to thoroughly review a Contractor produced lamacoid schedule.
2. Content:
   - 2.1 All electrical lamacoids shall be uniquely identified on the lamacoid schedule, except as follows:
     - a) Lamacoids for cables may reference the cable schedule.
   - 2.2 The lamacoid schedule shall at minimum include the following fields:
     - a) Item
     - b) Line 1
     - c) Line 2
     - d) Line 3
     - e) Text Size
     - f) Notes
3. Format:
   - 3.1 A lamacoid schedule will typically be prepared in Microsoft Excel, but other formats may be accepted by the City with approval.

19.3.3 Protection Settings Datasheets

1. Requirement:
   - 1.1 Protection Settings Datasheets are required for all projects with service equipment rated >= 1000 kVA. For projects with lower capacity, protection settings shall be shown on the drawings.
   - 1.2 Provide a protection settings datasheets for all equipment with configurable electrical protection settings, including but not limited to:
     - a) Breakers with L, LI, LSI, and LSIG settings;
     - b) Protection Relays;
     - c) Variable Frequency Drives;
     - d) Soft Starters; and
     - e) Intelligent Motor Starters.
2. Content:
   - 2.1 Indicate all applicable settings for the device along with the setting.
   - 2.2 The datasheets schedule shall at minimum include the following fields:
     - a) Device name and location
     - b) Setting name;
     - c) Setting value; and
     - d) A revision code next to each setting so that it is clear which revision of a document changed a setting.

3. Format:

3.1 Provide datasheets in editable Microsoft Word format, with settings in form format.

19.4 Design Calculations and Studies

19.4.1 General

1. All design decisions, leading to important design activities, must be supported by an appropriate calculation, which may be required for verification and justification. The Design Engineer shall prepare design calculations as required. It shall be the responsibility of the Design Team, to collect, verify and file all such calculations.
2. Methods and calculation formulae used shall be that permitted by company approved procedures and manuals or as specifically approved for the project. The software tools or vendor packages, utilized for the required calculations must be approved by the Lead Engineer for each specific project.
3. The general requirements for design calculations and studies are identified in Table 19-1.
4. Calculations done by subcontractors, contractors or vendors will be permitted if the calculation requires specialized knowledge or experience that a typical electrical design engineer would not possess. In these cases, it is the responsibility of the design engineer to ensure that the calculations follow all City standards and guidelines.
5. The calculations and studies shall only be deferred to the Contractor after review and agreement with the City.

19.4.2 Voltage Stability Study

1. Without limiting the general requirements to meet voltage drop requirements for all facilities with a service size greater than 1 MVA perform a voltage stability study to ensure that under all facility and utility operating scenarios that the power supply to the facility remains acceptable, avoiding any impact to operations or degrading the service life of the equipment.

19.4.3 Short Circuit, Coordination and Arc Flash Study

1. For all facilities, provide a comprehensive study and report which includes:
   - 1.1 Short circuit analysis including protective device evaluation
   - 1.2 Protective device coordination study
   - 1.3 Arc flash analysis
2. The Short Circuit, Coordination and Arc Flash Study shall be iteratively performed as part of the design process to ensure that the design is optimal, including short circuit, selective coordination and arc flash considerations.
3. Provide comprehensive arc flash labelling of all equipment:
   - 3.1 Type and style of label shall be submitted to and approved by the City prior to generating final labels.
   - 3.2 Detailed electrical hazard warning shall be compliant with part Q.4 of Annex Q of standard Z462-15 and produced and installed per ANSI Z535.4.
4. Refer to Appendix A – Arc Flash Study and Electrical System Modeling Requirements for detailed requirements.

19.4.4 Harmonic Studies

1. Harmonic studies are required to be performed prior to the installation of new non-linear loads at a facility. Manitoba Hydro mandates that the total voltage distortion (i.e. THD) must not exceed 3.5% and any individual harmonic or inter-harmonic voltage distortion must not exceed 2% at the point of common coupling and for supply voltages of 69kV and less. A harmonic study should be performed if 20% or more of the facility load consists of harmonic producing sources.
2. The harmonic study is the responsibility of the design engineer; however, the design engineer may utilize services provided by third party consultants and/or contractors with specialization in this area. In these cases, it is the responsibility of the design engineer to ensure that the calculations and recommendations meet local codes and requirements as well as all City standards and guidelines.

19.4.5 Instrument Transformer Sizing Calculations

1. Provide instrument transformer sizing calculations to justify selection of current and potential transformer ratings, including ratios, accuracy, and burdens, etc.
2. Current transformer calculations shall be based on IEEE C 37.110 “Guide for the application of Current Transformers Used for Protective Relaying Purposes” and take into account expected loading, short circuit levels, X/R values, protective relaying burdines, etc.

Table 19-1 : Design Calculations and Studies

Deliverable	Notes
Arc Flash Study	Required for all new work and the scope of the work must address the entire facility.
Cable Ampacity Calculations – Tray and Conduit	
Cable Ampacity Calculations – Underground	
Cable Pulling Calculations	Only required by the design engineer for major feeders. Contractor may be required to calculate for other cable pulls.
Cable Tray Loading Calculations	Not required for minor trays if load is self-evident.
Coordination Study	
Electrical Rooms Heating and Cooling Loading	Utilized for ventilation design.
Grounding Resistance Calculations	
Grounding Study	Typically only required for medium voltage systems. See Section 14.4.
Harmonic Study	Only required for systems with significant harmonic sources. See Section 19.4.2
Heat Tracing Calculations	
Lighting Illumination Calculations	
Load Tabulation	
Load Flow Study	Determine power flows and voltages in a power system. Ensure power flows are within equipment ratings. Ensure voltages are within acceptable operating limits.
Motor Starting Analysis	Typically only required for larger motors.
Power Factor Correction Calculations / Study	A formal study would only be provided for larger installations, where identified by the City as a deliverable.
Short Circuit Calculations / Study	
Soil Resistivity Survey	Typical for medium voltage systems.
Voltage Drop Calculations	Formal calculations would only be typical for major feeders. May be part of the Load Flow Study.

19.5 Example - Typical Deliverables for a Lift Station

Typical electrical deliverables for a wastewater lift station are shown in Table 19-2.

Table 19-2 : Wastewater Lift Station Electrical Typical Deliverables

Deliverable	Preliminary	Detailed Design	Notes
Single Line Diagram(s)	Y	Y	
Electrical Room Layout	Y	Y	
Cable Trench Layout		Y	
Demolition Drawings (as required)		Y	
Hazardous Location Plan		Y	
Electrical Equipment Plans (all levels)		Y	Show all equipment and convenience receptacles.
Lighting Plan (all levels)		Y	
Emergency Lighting Riser Diagram		Y	May be on lighting plans.
Distribution Panel Elevation		Y	
Motor Control Center Elevation		Y	
Motor Control Center Schedule		Y	
Panelboard Schedules		Y	
Luminaire Schedule		Y	
Emergency Lighting Battery Schedule		Y	May be on schedules drawing
Lift Pump Motor Starter Schematic		Y	Typical drawings not permitted.
Lift Pump Motor Starter Connection Diagram		Y	Typical drawings not permitted.
Panel Layout – Lift Pump Motor Starters		Y	
Motor Starter Schematics and Connection Diagrams (Other motors)		Y	Typical drawings not permitted.
Electrical Details		Y	
Telephone Network Details		Y	
Grounding Diagram and Details		Y	
Short Circuit, Coordination, and Arc Flash Study		Y	

This page is intentionally blank.

20 SAMPLE DRAWINGS

SK-101	Single Line Diagram, MCC-M710
SK-102	Single Line Diagram, 4160 V Electrical Distribution
SK-201	Motor Starter Schematic, P-L01, Wastewater Lift Pump
SK-202	Connection Diagram, P-L01, Wastewater Lift Pump
SK-203	Motor Starter Schematic, P-M541, Sump Pump

Appendix A

TABLE OF CONTENTS

PAGE

1. DEFINITIONS 2
2. ARC FLASH STUDY AND ELECTRICAL SYSTEM MODEL 2
2.1 Arc Flash Hazard Study and Associated Work 2
2.2 Scope of Study 3
2.3 Design Requirements 4
2.4 General Requirements 5
2.5 Short Circuit Analysis with Protective Device Evaluation 6
2.6 Protective Device Coordination Study 8
2.7 Arc Flash Hazard Study 9
2.8 Final Report 11
2.9 Final Deliverables 12
2.10 Labelling 13

APPENDIX A

ARC FLASH HAZARD STUDY AND ELECTRICAL SYSTEM MODELING REQUIREMENTS

1. DEFINITIONS

1.1.1 In this document, in addition to the definitions set out in the Electrical Design Guide, the following expressions have the following meanings (and, where applicable, their plurals have corresponding meanings):

(a) Arc Flash Hazard – a source of possible injury or damage to health associated with the release of energy caused by an electric arc.

(b) "Arc Flash Labels" has the meaning indicated in Annex Q of CSA Standard Z462 current edition.

(c) "Arc Flash, Short Circuit and Coordination Study Report" means the report indicated in Section xx.

(d) "HRC" means Hazard Risk Category as used in relation to Arc Flash Hazards.

(e) "MCC" means Motor Control Centre.

(f) "TCC" has the meaning time-current characteristic curves.

(g) "SKM Power*Tools for Windows" (SKM) has the meaning indicated in Section xx.

(h) "Work" or "Works" means the carrying out and the doing of all things, whether of a temporary or permanent nature, that are to be done by the contractor pursuant to this contract and, without limiting the generality of the foregoing, includes the furnishing of all plant, material, labour and services necessary for or incidental to the fulfilment of the requirements of this contract, including all Changes in Work.

2. ARC FLASH STUDY AND ELECTRICAL SYSTEM MODEL

2.1 Arc Flash Hazard Study and Associated Work

2.1.1 The consultant will complete the Arc Flash Hazard Study and all associated work outlined below using an SKM model and turn over the model and associated libraries to the City for its use at the end of the Work.

2.1.2 The systems shall be designed with Arc Flash restrictions as a consideration and, where possible with new systems, the Arc Flash restrictions shall be maintained at a Hazard Risk Category (HRC) of two (2) or lower as defined within CSA Z462.

2.1.3 The consultant shall ensure that all calculations, analyses, and recommendations for the Work meet the requirements of the latest edition of the following industry standards.

CSA C22.1	Canadian Electrical Code, Part I – Safety Standard for Electrical Installations (CEC)
CSA Z462	Workplace electrical safety (Z462)

IEEE 1584	IEEE Guide for Performing Arc–Flash Hazard Calculations (IEEE 1584)
IEEE 141	IEEE Recommended Practice for Electric Power Distribution for Industrial Plants (IEEE 141, or the Red Book)
IEEE 241	IEEE Recommended Practice for Electric Power Systems in Commercial Buildings (IEEE 241, or the Grey Book)
IEEE 242	IEEE Recommended Practice for Protection and Coordination of Industrial and Commercial Power Systems (IEEE 242, or the Buff Book)
IEEE 399	IEEE Recommended Practice for Industrial and Commercial Power System Analysis (IEEE 339, or the Brown Book)
IEEE 551	Recommended Practice for Calculating AC Short–Circuit Currents in Industrial & Commercial Power Systems (IEEE 551, or the Violet Book)
IEEE 1015	IEEE Recommended Practice For Applying Low Voltage Circuit Breakers Used in Industrial and Commercial Power Systems (IEEE 1015, or the Blue Book)
ANSI / IEEE C37.010	IEEE Application Guide for AC High-Voltage Circuit Breakers Rated on a Symmetrical Current Basis (IEEE C37.10)
ANSI / IEEE C37.13	IEEE Standard for Low-Voltage AC Power Circuit Breakers Used in Enclosures (IEEE C37.13)
	The Manitoba Electrical Code and the Winnipeg Electrical By-law

2.2 Scope of Study

2.2.1 The scope of the study shall be based on the Works including the complete facility in its existing condition, and all transitional stages up to the final configuration.

2.2.2 The City will supply to the consultant:

(a) the anticipated Services required, if they deviate from those outlined in this section;

(b) any available single line diagrams showing the modes of operation and the configurations to be studied;

(c) any existing arc flash models for the facility. The existing model is supplied as is and the consultant shall validate and update the model with the Works as required;

(d) Manitoba Hydro supplied utility information regarding fault levels and supply transformer(s);

(e) other available information as required by the consultant for completion of the analysis; and

(f) site access for data collection and verification.

2.2.3 The consultant shall be responsible for removing existing Arc Flash Labels.

2.2.4 The consultant shall provide and install Arc Flash Labels for the entire facility in a manner such that equipment is always labelled with current arc flash values.

2.3 Design Requirements

2.3.1 All new and modified electrical designs shall ensure that arc flash energies are within the ratings specified in Table 2.3-1.

2.3.2 The electrical designer shall model the arc flash energies during design time and specify equipment as required to ensure that the design arc flash ratings are maintained.

Table 2.3-1 : Arc Flash Design Requirements

Equipment	Arc Flash Hazard / Risk Rating		Notes
	Recommended Maximum	Absolute Maximum (See Note 1)	
Control Panels, <= 600 V	0	1	
Distribution Panel, <= 600 V	2	3	
Distribution Panel, <= 600 V, Main Breaker	3	4	2
Motor Control Centre, 600 V	2	3	
Motor Control Centre, 600 V, Main Breaker	3	4	2
Panelboard, 208/120 V	0	2	
Panelboard, 347/600 V	1	2	
Switchgear, <= 600 V	3	4	
Switchgear, <= 600 V, Main Breaker	4	4	
Switchgear, Medium Voltage	3	4	
Switchgear, Medium Voltage, Main Breaker	4	4	
Transformers	4	-	3

Notes:

1. The City must approve all cases where the arc flash energies exceed recommended maximum values.
2. The main breaker must be in a separate compartment to permit a separate rating.
3. It is not typical to require live work on energized transformers.

2.4 General Requirements

2.4.1 As part of any Arc Flash Hazard Study assignment, the consultant shall include:

(a) a short circuit analysis with protective device evaluation;

(b) a protective device coordination study; and

(c) a single-line diagram of the system showing results of the analysis. The single line diagram will done following current City drafting standards on current City drawing title blocks and will be signed by the engineer referenced in Item.

(d) Upon completion, the consultant shall submit a draft and final report detailing the findings.

2.4.2 The consultant shall conduct the Arc Flash Hazard Study under the supervision and approval of an EGM registered professional electrical engineer with a minimum of five (5) years' experience in performing and interpreting power system studies including Arc Flash Hazard.

2.4.3 The consultant shall utilize the most current version of the SKM Power*Tools for Windows software package to perform all modelling and analysis.

2.4.4 Where the City has existing studies in its records using SKM software, the consultant shall incorporate and consolidate these SKM models into its model. The consultant shall be responsible for verification of any existing models provided by the City. The consultant may rely on the existing models for the purpose of arc flash modelling, however, no reliance on the models may be utilized for any other purpose associated with the design

2.4.5 The consultant shall coordinate with the City to acquire details required to complete the analysis. The consultant shall perform a document review of available documents and drawings prior to formally verifying all documentation on site.

2.4.6 The consultant shall arrange, with the Contract Administrator, travel to each site to acquire the necessary data required to complete the study.

2.4.7 The Consultant shall be made aware of and shall follow all site safety requirements.

2.4.8 Data collection, verification and analysis shall begin at the Utility point of service and include all downstream AC electrical equipment, including but not limited to:

(a) Switchgear, distribution switchboards, panelboards and MCCs rated 120/208 volts and higher. (This criterion is more stringent than the Standards covering Arc Flash Hazard Study and shall be used by the consultant to define the Scope of Study;

(b) disconnect switches;

(c) neutral grounding resistors;

(d) standby generators;

(e) manual transfer switches;

(f) automatic transfer switches;

(g) busway and splitters;

(h) motor starters;

(i) power factor correction equipment;

(j) adjustable speed drives;

(k) all medium voltage equipment;

(l) primary and secondary transformer connection cubicles; and

(m) other significant locations throughout the system as identified by the City.

2.4.9 The consultant shall also carry out the analysis of any DC equipment using DC incident energy calculations found in CSA Z462 Annex D Section D.5.

2.4.10 For existing distributions, the consultant shall verify all equipment nameplates and ratings; protective device manufacturers, types, sizes and settings; cable sizes, types, lengths, raceways and configurations; and other relevant details on–site to confirm the accuracy of the City's drawings and previous Arc Flash Hazard Study studies.

2.4.11 Transformer design impedances shall be used when actual test impedances are not available. The consultant shall consider the full range of impedances for transformers equipped with on-load tap changers to determine the worst case scenario.

2.4.12 Motor contributions shall be incorporated in determining fault levels as follows:

(a) all Medium voltage motors shall be individually modelled;

(b) all 600V motors equal to or greater than 50 HP shall be individually modelled; and

(c) all smaller motors shall be lumped into groups, with each grouping not to exceed 50HP, feeding their nearest panelboard, MCC or distribution switchgear.

2.4.13 The consultant shall use actual conductor impedances and configurations if known. If actual values are not known, typical impedance values shall be obtained from manufacturer for the given configuration or calculated from the given materials, geometry and configuration used.

2.4.14 Any information from manufacturers and any calculated or assumed values shall be supplied, in an appendix with clear reference to report sections, as information in the final report.

2.5 Short Circuit Analysis with Protective Device Evaluation

2.5.1 The consultant shall perform a short circuit analysis with a protective device evaluation based on this section and the General Requirements section.

2.5.2 Four operating scenarios are to be evaluated:

(a) Scenario 1 will represent an “Infinite Bus” scenario per Winnipeg Electrical By-law (By-law No. 86/2018) Rule 14-012:

(i) The calculation will assume an infinite primary bus.

(ii) The percent impedance for transformers will be the percent impedance of the installed transformer or the value provided by Manitoba Hydro for a utility-owned transformer.

(b) Scenario 2 and Scenario 3 will be based on the Manitoba Hydro provided normal and expected maximum available fault levels at the point of utility interconnection.

(c) Scenario 4 will represent a very low short-circuit current that can be reached at the point of interconnection.

2.5.3 Calculations shall be performed to represent the maximum and minimum contributions of fault current magnitude for all normal and emergency operating conditions. The minimum calculation will assume that the system contribution is at a minimum with minimum motor contribution (all motors off). Conversely, the maximum calculation will assume a maximum contribution from the system and will assume the maximum amount of motors is operating.

2.5.4 Calculations shall be based upon all configuration scenarios including extreme supply conditions from the utility.

2.5.5 The analysis calculation methodology shall be in accordance with the listed IEEE and ANSI C37 standards. Short circuit calculations shall be prepared in SKM Systems Analysis software.

2.5.6 Calculate the short circuit momentary and interrupting duties for a three-phase bolted fault and single-line-to-ground faults at each location in Item 2.3.7. Include any planned future standby generation.

2.5.7 Evaluate all electrical equipment’s short circuit withstand rating within the Works at calculated short circuit levels.

2.5.8 Evaluate all protective devices’ interrupting capacities at the calculated short circuit level of their associated switchboard, MCC or panelboard, etc.

2.5.9 Results of the equipment and protective device evaluation shall be presented in tabulated form within the short circuit evaluation analysis comparing the highest calculated fault level to the device withstand/interrupting ratings.

2.5.10 Include the following information in the tabulation:

(a) Bus identifier.

(b) Device name.

(c) Manufacturer and description of equipment.

(d) Voltage.

(e) Device withstand or interrupting rating.

(f) Suitability of device interrupting rating.

(g) Calculated short circuit current for each Scenario identified in Item 2.4.2.

(h) Example table:

Bus ID	Device Name	Manufacturer/ Description	Voltage	Device Rating	Suitability	Calculated Current			
						Scenario 1	Scenario 2	Scenario 3	Scenario 4

2.5.11 For the equipment within the facility, the consultant shall notify the City, in writing, of circuit protective devices and any system component inadequately rated for the calculated available fault current.

2.5.12 Inadequate rating of any equipment supplied or modified under the Work is not acceptable.

2.6 Protective Device Coordination Study

2.6.1 The consultant shall perform a protective device coordination study based on the requirements outlined in this section and in the General Requirements section.

2.6.2 The consultant shall verify any built-in SKM device models used in the software model against device manufacturer's documentation. Any device that is not present within the SKM library shall be modelled as a custom device as per the manufacturers most current product information for the specific device installed.

2.6.3 The consultant shall prepare and present time-current characteristic curves (TCC), displayed on log-log scale graphs. All curve sheets shall be multi-colored for improved clarity. Include on each TCC graph:

(a) a complete title and one-line diagram with legend identifying the specific portion of the system covered and the configuration used;

(b) voltage at which curves are plotted;

(c) current multiplier; and

(d) ANSI frequent fault damage curves.

2.6.4 The equipment modeled shall include:

(a) fuses including manufacturer's minimum melt, total clearing, tolerance, and damage bands;

(b) low voltage circuit breaker trip devices, including manufacturer's tolerance bands;

(c) transformer full-load current, magnetizing in-rush current, and ANSI through-fault protection curves for both bolted and single line to ground fault conditions;

(d) conductor damage curves;

(e) pertinent motor starting characteristics and motor damage points where applicable;

(f) the largest feeder circuit breaker in each MCC and applicable panelboards; and

(g) ground fault protective devices, as applicable. To increase clarity of TCCs multiple ground fault devices in a circuit shall be shown on a separate TCC.

2.6.5 The TCC shall be used to determine the required sizes and settings of the protective devices to optimize selectivity and meet Canadian Electrical Code requirements.

(a) Provide adequate time margins between device characteristic curves such that selective operation is provided, while providing proper protection.

(b) For each device, show the as-found settings. Identify the device associated with each curve by device name, manufacturer, device type, function, and, if applicable, tap, time delay, and pick-up settings.

(c) Terminate device characteristic curves at a point reflecting maximum symmetrical or asymmetrical fault current to which the device is exposed.

(d) Where applicable, the incoming Manitoba Hydro protective devices shall be the most upstream device analyzed in a coordination study. The consultant shall coordinate Manitoba Hydro protection TCC with the rest of the system. If necessary, a Manitoba Hydro contact will be provided to the consultant by the City.

(e) Where devices are existing, changes to settings are to be shown on a separate TCC with associated devices demonstrating the improved coordination. The revised setting shall be recommended to the City and presented in the report as final only when the City has agreed to allow the changes. Where changes are required, they shall be clearly identified in a separate table with their corresponding device names to ensure that changes are made as the labels are applied. The consultant shall implement the proposed changes.

2.6.6 A narrative analysis shall accompany each coordination curve sheet and describe the coordination and protection in explicit detail. Areas lacking complete coordination shall be highlighted, and the consultant shall provide reasons for allowing the condition to remain as-is or provide recommendations to resolve the situation.

2.6.7 The consultant shall provide all final protective device settings in a table, including all enabled elements (overcurrent, ground overcurrent, differential, restricted earth, etc.), as well as supporting calculations justifying selected settings.

2.7 Arc Flash Hazard Study

2.7.1 The consultant shall perform an Arc Flash Hazard Study based on the guidelines outlined in this section and in the General Requirements section.

2.7.2 The flash protection boundary and the incident energy shall be calculated at all significant locations in the electrical distribution system as outlined in CSA Z462 and Annex D - IEEE 1584 calculation method where work could be performed on energized parts.

(a) Separate calculations shall be made for different compartments within the same overall equipment where the arc flash energies will be different.

(i) For example, the main incoming breaker compartments and feeder breaker compartments in medium voltage switchgear shall have independent arc flash calculations performed.

(b) For each equipment location with a separately enclosed main device (where there is adequate separation between the line side terminals of the main protective device and the work location), calculations for incident energy and flash protection boundary shall be provided for both the line and load side of the main breaker.

(i) When performing incident energy calculations on the line side of a main breaker the line side and load side contributions shall be included in the fault calculation.

(c) The calculations at tie-breakers or other locations where two sources may contribute to an arcing fault at a common piece of equipment or switchgear cell, the arc flash energy shall be calculated based on combined contributions from both sources, regardless of the normal operating state of the device.

(d) Safe working distances shall be based upon the calculated arc flash boundary as per CSA Z462. Safe working distances shall be determined for both the circumstance of the conductors exposed and the circumstance of covers closed and fully latched and bolted.

(e) Arc flash calculations shall be based on actual overcurrent protective device clearing time. Maximum clearing time will be capped at two (2) seconds based on IEEE 1584 section B.1.2: Where it is not physically possible to move outside of the arc flash protection boundary in less than two (2) seconds during an arc flash event, a maximum clearing time based on the specific location shall be utilized.

(f) Arc Flash Hazard results table summary, which shall include:

(i) Location & equipment designation;

(ii) Nominal voltage;

(iii) Flash protection boundary;

(iv) Incident energy; and

(v) Working distance.

2.7.3 The short circuit calculations and the clearing times of the phase overcurrent devices will be determined from the City's provided drawings and information, and equipment model numbers verified by the consultant.

(a) The short circuit calculations and the corresponding incident energy calculations for multiple system scenarios shall be compared, and the greatest incident energy shall be uniquely reported for each equipment location.

(b) The incident energy calculations shall consider the accumulation of energy over time when performing arc flash calculations on buses with multiple sources. Iterative calculations must take into account the changing current contributions, as the sources are interrupted or decremented with time. Fault contribution from motors and generators should not be considered beyond 3-5 cycles.

2.7.4 Mis-coordination should be checked amongst all devices. The calculation shall utilize the fastest device to compute the incident energy for the corresponding location.

2.7.5 The consultant shall review existing protection settings/devices for proper coordination. The consultant shall recommend mitigation measures to reduce the arc flash hazard as appropriate. These recommendations may include but are not limited to either equipment protection and/or improving arc flash incident energy levels by adjusting existing protection settings/devices. The corresponding incident energy levels shall be provided where improvements can be made.

2.8 Final Report

2.8.1 All final reports and drawings shall be sealed by a Professional Electrical Engineer registered and in good standing with EGM.

2.8.2 The Arc Flash, Short Circuit and Coordination Study Report shall include the following sections:

(a) Executive summary.

(b) Descriptions, purpose, basis and scope of the study.

(c) Modes of operation studied.

(d) List of assumptions made where specific information was not available.

(e) List of all study input data, including but not limited to: Utility information; motor data; transformer data; cable sizes, types and lengths; protective device types and settings; etc.

(f) Short Circuit Study

(i) Tabulation of distribution equipment, circuit breaker, fuse and other protective device withstand and interrupting ratings versus calculated short circuit duties as per Items 2.4.9 and 2.4.10.

(ii) Results of short circuit study listing equipment that is applied above short circuit current rating and recommendations if appropriate.

(g) Protective Device Coordination Study

(i) TCC curves demonstrating protective coordination for all segments of the Work including all interfaces to the facility distribution.

(ii) Explanatory descriptions to any curves or graphs shall be provided to aid with interpretation.

(iii) Tabulation of all protective device settings and fuse selections.

(iv) Recommendations to improve coordination and/or reduce arc flash energies.

(v) Tabulation of all recommended settings.

(h) Arc Flash

(i) Fault current calculations including a definition of terms and a guide for interpretation of the results.

(ii) Details of the incident energy and flash protection boundary calculations for each scenario analyzed.

(iii) Design methodology employed to reduce arc flash energies and provide for selective coordination.

(i) Single-line diagram of the Work, which shall include:

(i) transformer rating, voltage ratio, impedance, and winding connection;

(ii) feeder cable phase, neutral and ground sizes, length of cable, conductor material, and conduit size and type where applicable;

(iii) switchgear, switchboards, panelboards, MCCs, fuses, circuit breakers and switches continuous ratings and interrupting capabilities or withstand capacities, as applicable;

(iv) protective relays with appropriate device numbers, CTs and PTs with associated ratios;

(v) detailed legend indicating device type identification and other significant details; and

(vi) incident arc flash energies.

2.8.3 The consultant shall provide the City with a copy of the final SKM Systems Analysis model generated for each stage of the Works. The final update will include all work performed to date by the consultant for each facility.

2.9 Final Deliverables

2.9.1 Prior to Total Performance, the consultant shall submit:

(a) electronic Word and pdf copies of the Arc Flash, Short Circuit and Coordination Study Report;

(b) three (3) bound, color, paper copies of the final Arc Flash, Short Circuit and Coordination Study Report, with drawings and TCCs formatted as 11x17 pages and folded into the report;

(c) native SKM Power Tools model and library files, including all scenarios assessed; and

(d) single line drawings shall be submitted as AutoCAD dwg files, pdf files and oversize ISO A1 drawings printed on Mylar.

2.10 Labelling

2.10.1 The consultant shall remove existing Arc Flash Labels prior to installing new labels.

2.10.2 Arc flash labels shall utilize metric units.

2.10.3 The consultant shall provide and install detailed Arc Flash Labels on all electrical equipment encompassed by the Arc Flash Hazard Study.

2.10.4 Certain types of equipment, such as transformers, contain multiple voltage levels. The arc flash incident energy needs to be evaluated at all voltage levels present and the highest incident energy computed will need to be shown on the arc flash label. The approach distances on the labels must always reflect the highest voltage level present within the equipment, regardless of which voltage level generates the highest incident energy.

2.10.5 The arc flash label format used for equipment rated Category 0 through Category 4 is shown in Figure 2.9-1 and Figure 2.9-2.

(a) Warning labels are to utilize an orange heading with the word “Warning”.

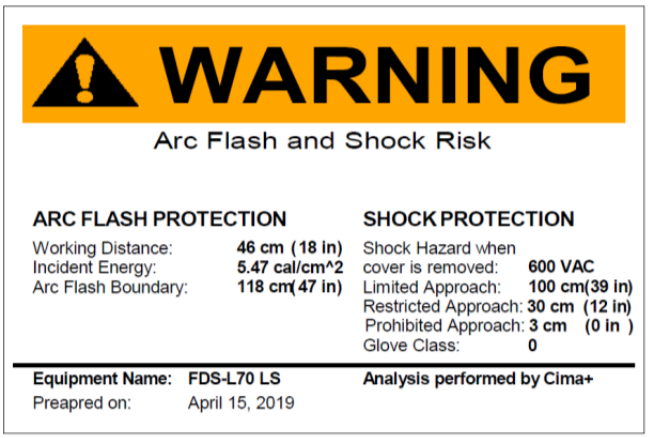

Figure 2.9-1

(b) For equipment that is given a Dangerous category rating, the arc flash labels are to utilize a red heading with the word “Danger”.

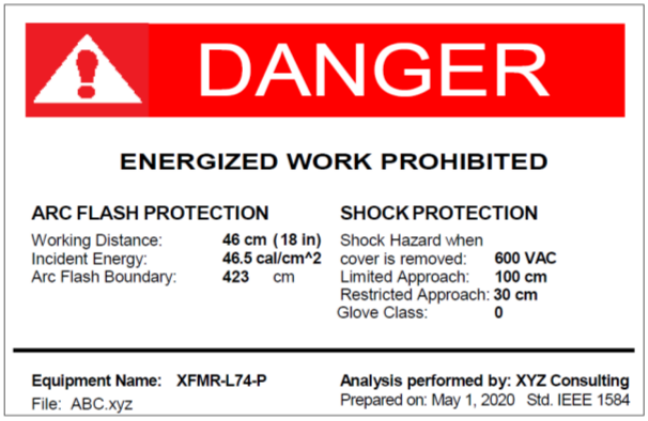

Figure 2.9-2

2.10.6 The consultant shall coordinate with the City to provide an Arc Flash Label format and size acceptable to the City. Type and style of label shall be submitted to the City and endorsed as “Reviewed” prior to final printing and application of labels.

2.10.7 Detailed electrical hazard warning shall be compliant with CSA Z462 Annex Q Section Q.4 and produced and installed per ANSI Z535.4. Labels shall be vinyl, waterproof with UV Resistance and a five (5) year rated life.