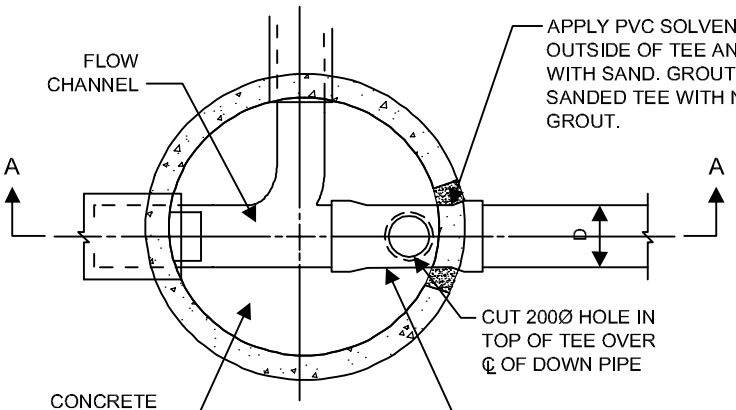

PLAN VIEW

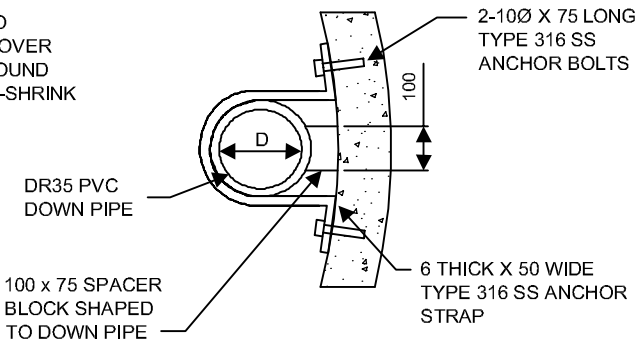

DOWN PIPE ANCHOR STRAP DETAIL

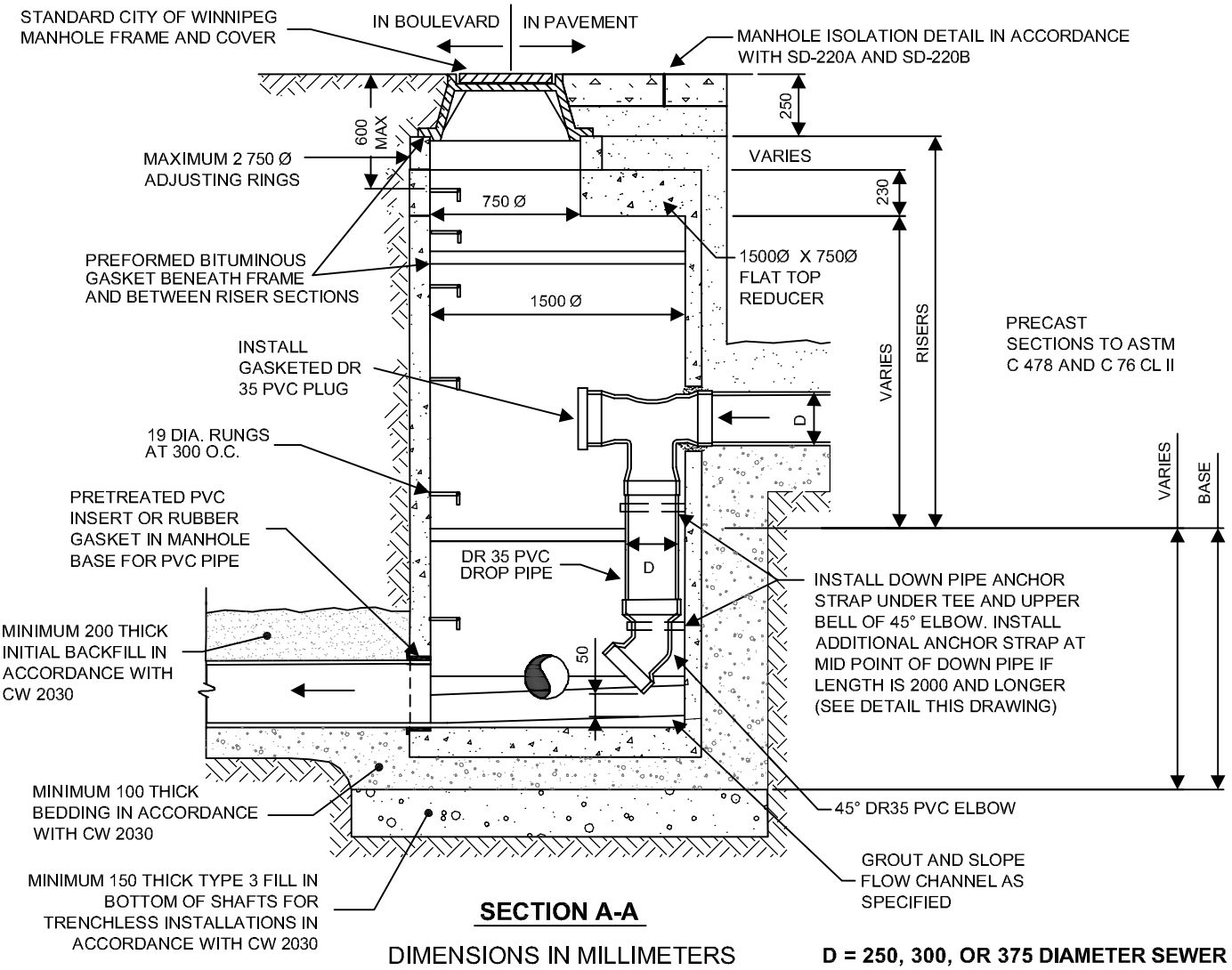

SECTION A-A

DIMENSIONS IN MILLIMETERS

D = 250, 300, OR 375 DIAMETER SEWER

Winnipeg **THE CITY OF WINNIPEG** **WATER & WASTE DEPARTMENT**		**Reference Spec. No.** CW 2030 CW 2130	
STANDARD PRECAST CONCRETE MANHOLE (FOR UP TO 525 DIAMETER PIPE) WITH INTERNAL DROP PIPE	**Designed By:** TW	**Drawn By:** PB	**Scale:** N.T.S.
	Checked By: KZ	**Date:** 06-12-14 **Revision:**	**Drawing No.** SD-010D
	Approved: UNDERGROUND WORKS COMMITTEE		